dPOFLEX Pump Head Operating Manual

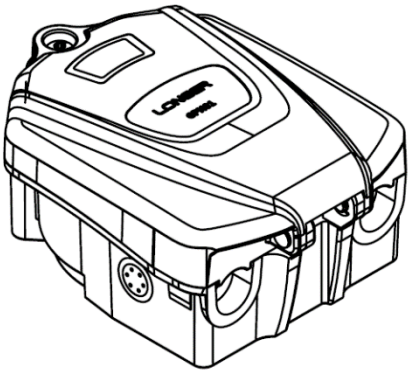

dPOFLEX GPH Pump Head

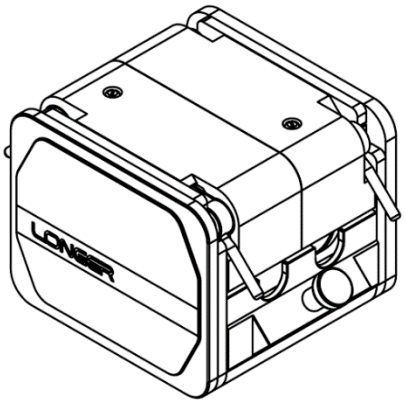

dPOFLEX LPH Pump Head

dPOFLEX pump heads are designed for the high flow rate industrial applications. The max flow rate of GPH series could achieve 17L/min, and the max flow rate of LPH pump head could achieve 13.5L/min. GPH series have three pump heads: GPH01, GPH02, GPH03, accepting several different tubing wall thickness and bore size to get a wide range of flow rate. LPH has low pulsation design for high dispensing accuracy.

1. Main Function and Features

- GPH roller assembly uses elastic structure, which could be applied to different fluids and pipeline pressures and prolong the tubing life.
- GPH has two tubing retention modes: continuous tubing and tubing fitting assembly.
- LPH has low pulsation design, could achieve high dispensing accuracy by using double-tube assembly
- LPH could be used for double channel pumping by using two continuous tubings
- dPOFLEX pump head has good corrosive resistance. Roller material is 304sst, GPH casing material is die-cast aluminum with anti-corrosion coating, and LPH casing material is anodized aluminum with anti-corrosion coating.
- GPH and LPH pump heads are designed with open head sensor for enhanced user safety

Longer Precision Pump Co., Ltd
Add: 3rd/4th Floor, Building 6B, University Science Park Baoding National, High - Tech Industrial Development Zone
Baoding, Hebei, China 071051
Web: www.longerpump.com
Tel: +86–312–3110087 Fax: +86–312–3168553
Email: longer@longerpump.com

2. Technical Specification

Product Mode	Product Code	Roller Number	Roller Material	Casing Material	Speed (rpm)	Tubing (ID*Wall mm)	Max. Reference Flow Rate (L/min)	Weight (Kg)
dPOFLEX GPH01	05.01.70A	2	304sst	Die-cast aluminum	<=265rpm	26# (6.4x3.2)	3.0	4.1
						73# (9.5x3.3)	6.0	
						82# (12.7x3.3)	10.5	
						184# (15.9x3.2)	15.0	
dPOFLEX GPH02	05.01.71A	2	304sst	Die-cast aluminum		186# (12x4)	9.5	4.0
						188# (17x4)	17.0	
dPOFLEX GPH03	05.01.71B	4	304sst	Die-cast aluminum		186# (12x4)	8.5	4.7
						188# (17x4)	14.0	
dPOFLEX LPH01	05.01.72A	6	304sst	Anodized aluminum		185# (8x4)	4.5	8.6
						186# (12x4)	9.0	
						187# (16x4)	13.5	

Note: The maximum reference flow was tested under a specific condition: pumping water with Longer silicone tubing, 0 suction lift and no outlet pressure

3. Outline Dimension

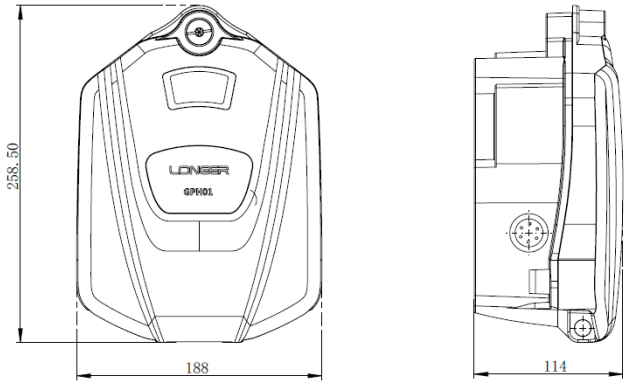

dPOFLEX GPH Pump Head

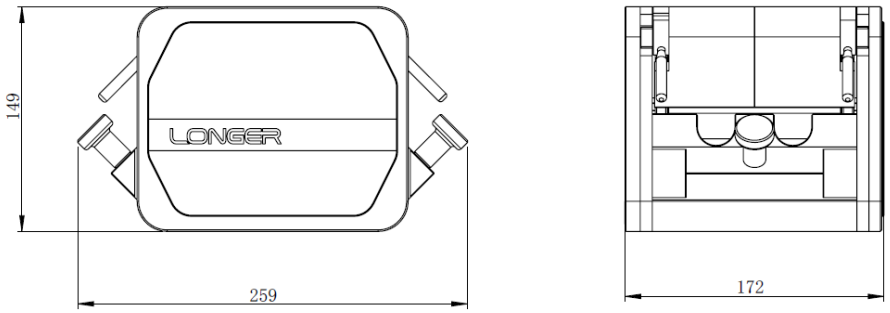

dPOFLEX LPH Pump Head

Longer Precision Pump Co., Ltd
Add: 3rd/4th Floor, Building 6B, University Science Park Baoding National, High - Tech Industrial Development Zone
Baoding, Hebei, China 071051
Web: www.longerpump.com
Tel: +86–312–3110087 Fax: +86–312–3168553
Email: longer@longerpump.com

4. GPH Pump Head Installation and Tubing Loading

4.1 GPH Pump Head Installation

1) Turn the latch clockwise with a hex key or flat-blade screwdriver to open the pump head.



2) Mount the pump head casing to the pump drive with 4 slotted pan head screws M6x12. The tubing outlets face right or down.

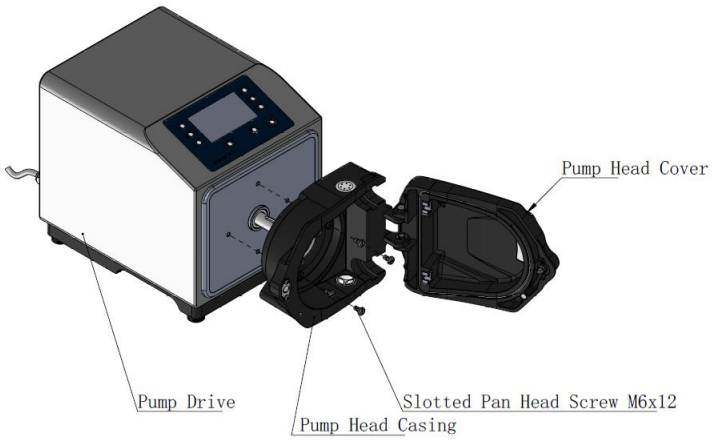

3) Put the motor shaft pad into the shaft hole of the rotor assembly. Please note that the dimensions of the motor shaft pads matched with the drive BP01 and GP01 are different.



Motor Shaft Pad

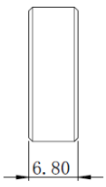

Motor Shaft Pad-GP01

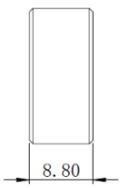

Motor Shaft Pad-BP01

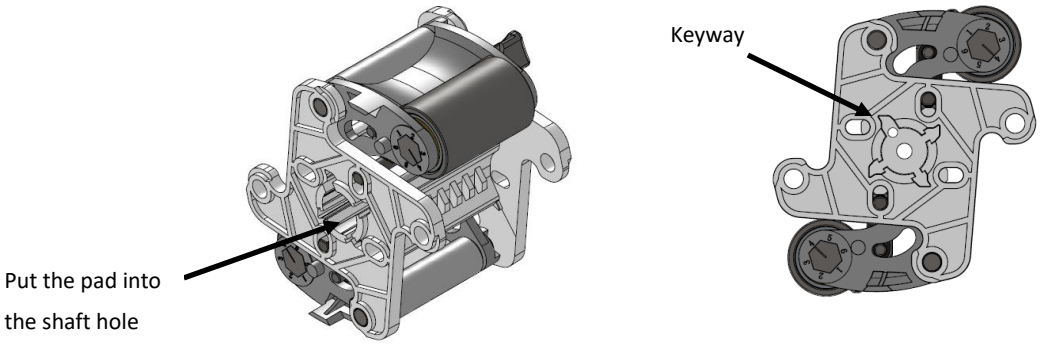

Rotor Assembly

Longer Precision Pump Co., Ltd
Add: 3rd/4th Floor, Building 6B, University Science Park Baoding National, High - Tech Industrial Development Zone
Baoding, Hebei, China 071051
Web: www.longerpump.com
Tel: +86–312–3110087 Fax: +86–312–3168553
Email: longer@longerpump.com

Place the rotor assembly including the pad on the motor shaft of the pump drive, aligning the keyway with the flat key of the motor shaft. Secure the rotor assembly with socket head cap screws M6x20, then put the rotor cover on the rotor.

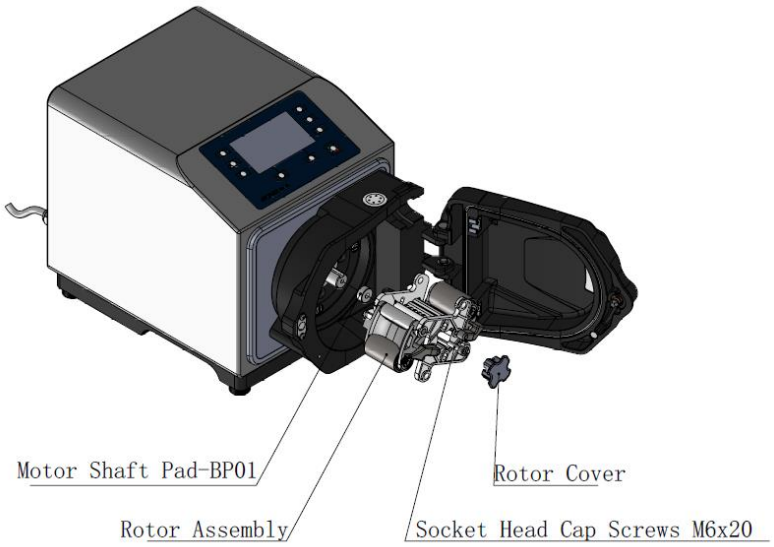

4.2 Tubing Loading on GPH

1) Locate the two U-shape casing clamp halves into the casing ports. The pin at the bottom of the clamp should be aligned with the hole on the casing port. Locate the corresponding cover clamp halves which have raised “T” locating sections, into the slots on the clamp bracket of the pump head cover. Push and slide the cover clamps into their locked position in the direction shown in below figure.

Note: The U-shape casing clamp halves and cover clamp halves are not needed when load the tubing fitting assembly. For the tubing fitting assembly, align the pin on the fitting with the hole on the casing port to ensure the correct loading.

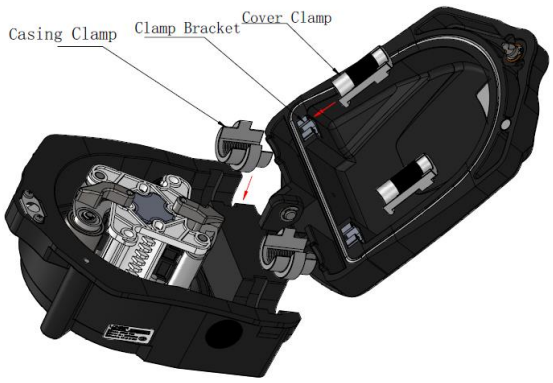

Longer Precision Pump Co., Ltd
Add: 3rd/4th Floor, Building 6B, University Science Park Baoding National, High - Tech Industrial Development Zone
Baoding, Hebei, China 071051
Web: www.longerpump.com
Tel: +86–312–3110087 Fax: +86–312–3168553
Email: longer@longerpump.com

2) Snap the roller release levers clockwise to disengage the rollers.

Release Lever

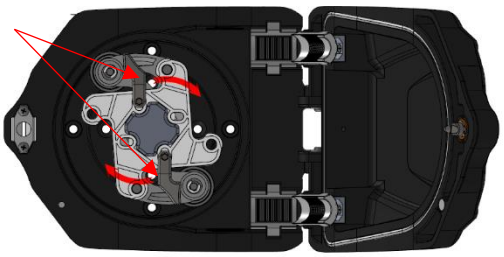

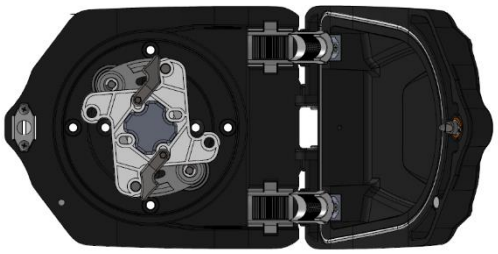

Disengaged Rollers

3) Locate the tubing inside the pump head, the length between the two end faces of the casing ports is 365mm.

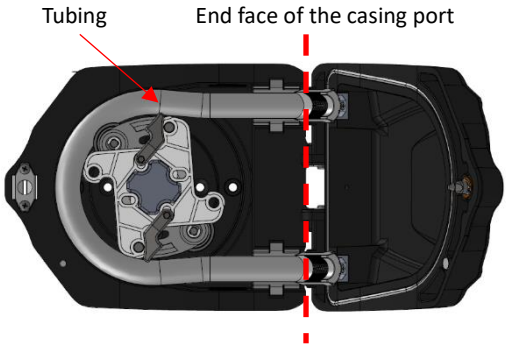

4) Turn the lever counter-clockwise to engage the rollers.

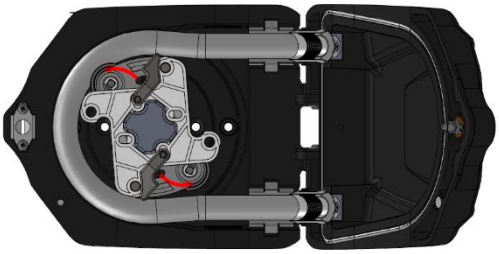

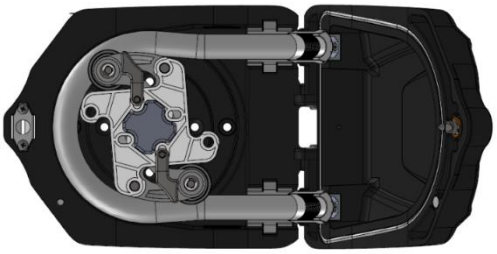

Engaged Rollers

5) Close the cover to engage the latch.



Longer Precision Pump Co., Ltd
Add: 3rd/4th Floor, Building 6B, University Science Park Baoding National, High - Tech Industrial Development Zone
Baoding, Hebei, China 071051
Web: www.longerpump.com
Tel: +86–312–3110087 Fax: +86–312–3168553
Email: longer@longerpump.com

5. LPH Pump Head Installation and Tubing Loading

5.1 LPH Pump Head Installation

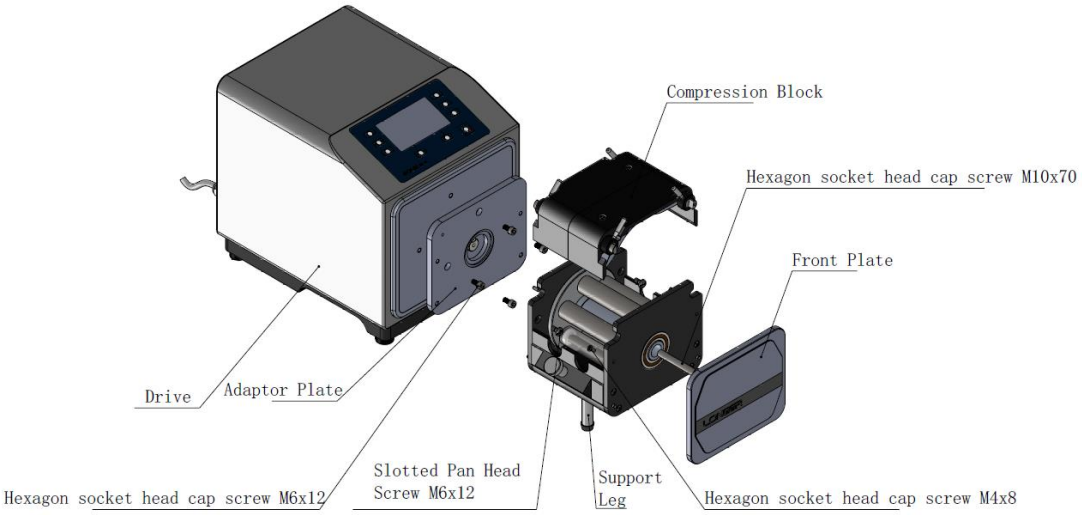

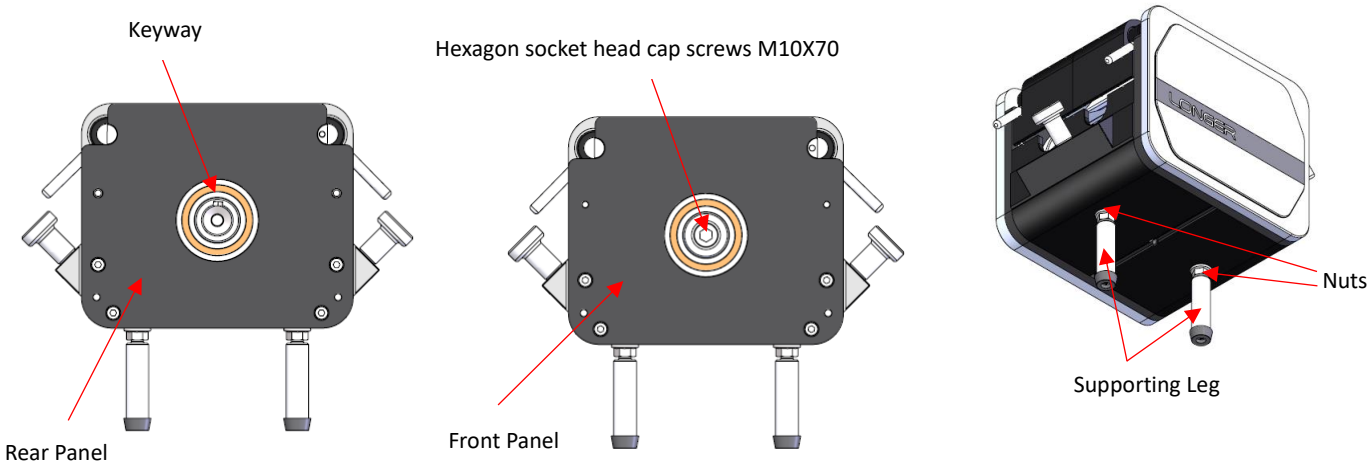

1) Loosen the 2 hexagon socket head cap screws M4X8, and take off the front plate from LPH01
2) Loosen the 2 slotted pan head screws M6X12, and take off the adaptor plate of LPH01
3) Mount the adaptor plate of LPH01 on the pump drive with 4 hexagon socket head cap screws M6X12
4) Align the keyway of the rotor with the flat key of the motor shaft, mount the LPH01 pump head onto the motor shaft, then secure the pump head with 2 slotted pan head screws M6X12
5) Tighten the hexagon socket head cap screw M10X70 inside of the rotor shaft hole to engage the rotor coupler to the motor shaft.
6) Mount the front plat onto the pump head with 2 hexagon socket head cap screws M4X8. Adjust the supporting legs to support the pump head stably. Tighten the nuts to secure the supporting leg.

5.2 Tubing Loading on LPH

5.2.1 Double-tubing Assembly Loading

Remove the compression block. Put the double-tubing assembly over the clamping pegs, then put the compression block back and lock the levers.

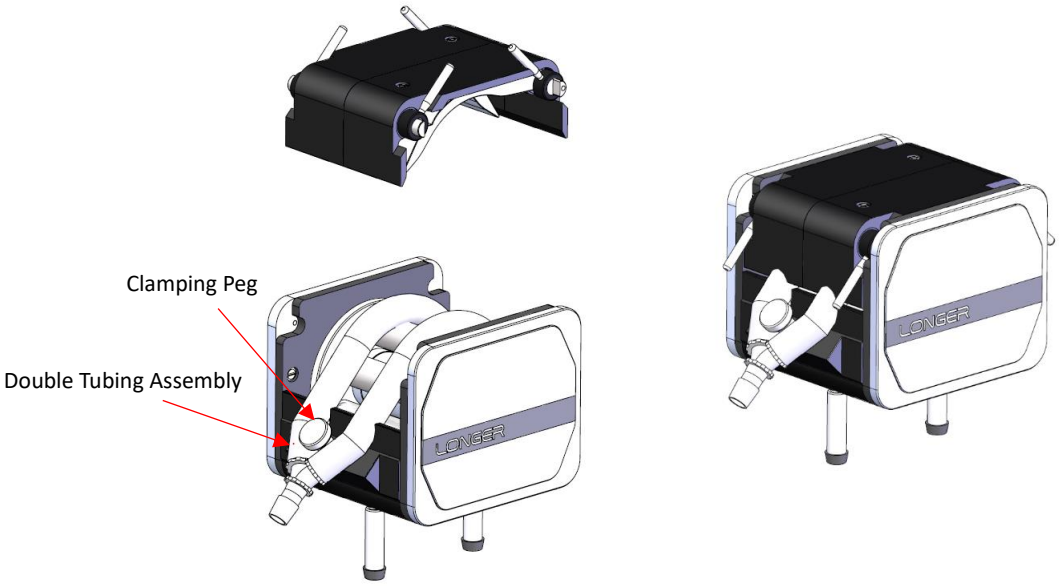

5.2.1 Continuous Tubing Loading

Remove the compression block. Unscrew and remove the clamping pegs. Locate the tubing into the double-U clamping blocks. Tighten the clamp screws to secure the double-U clamping blocks. Put the compression block back and lock the levers.

