# Product Datasheet

## Fluid Handling

ASP-LP180 Diaphragm Pump

-Aurora Pro Scientific
**Email:** sales@auroraprosci.com
**Website:** www.auroraprosci.com

## 1. Product Description



The micro diaphragm pump based on a DC motor that drives a connecting rod to oscillate an elastic membrane, resulting in pumping action. During the downward stroke, the diaphragm draws the medium in via the inlet valve while pushing the medium out via the outlet valve. The pump has two options for DC motor (brushed or brushless DC motor). There are two speed regulation modes: PWM or analog voltage 0-5VDC to adjust the pump speed from 1500 RPM to 4200 RPM. This pump is designed for applications requiring miniaturized size, aggressive liquid, low power consumption and light weight and suitable for inkjet printing, medical equipment, and wastewater treatment, etc.

**Key Features**

- Self-priming
- Compact footprint
- Low power consumption: 6W
- Wet material: diaphragm (EPDM/Viton), Gasket (EPD/PTFE), Valve (EPDM/Viton)
- Stable flow and low noise
- Motor speed: 1500-4200 RPM
- Fluid temperature: 0 - 40 °C
- Maximum flow rate: 0.24 L/min (DI Water)
- Maximum vacuum: 5.9 in Hg
- Weight: 1.5Kg

**Typical Applications**

- Precision liquid handling or delivery
- Hemodialysis application or medical infusion equipment
- Wastewater treatment
- Pharmaceutical manufacturing processes

## 2. Pump/Motor Specification

| Pump Model | ASP-LP180 |
|---|---|
| Wet Material | EPDM/PTFE |
| Pump Diaphragm | EPDM/Viton |
| Pump Body | PPS |
| Pump Voltage | 12/24VDC |
| Voltage Control | Analog/PWM |
| Flow Rate | 0.24L/min |
| Maximum Pressure | 0.3MPa (43.5MPa) |
| Maximum Vacuum | 5.9 in Hg |
| Power | 6W |
| Pump Motor | Brushless DC or Brushed DC |
| Medium | Air or Liquid |
| Fluid Temperature | 0-40 Deg C |
| Relative Humidity | <80%RH |
| Pump Dimension | 2.5” x 1” x1.5” |
| Noise | >60dB |
| Lifetime | 5000 hours for BLDC; 500 hours for DC |
| Weight | 120 grams |

The flow rate is tested with DI water under standard atmospheric pressure and room temperature (22C) without discharge pressure applied.

## 3. Product Dimension (Unit: mm)

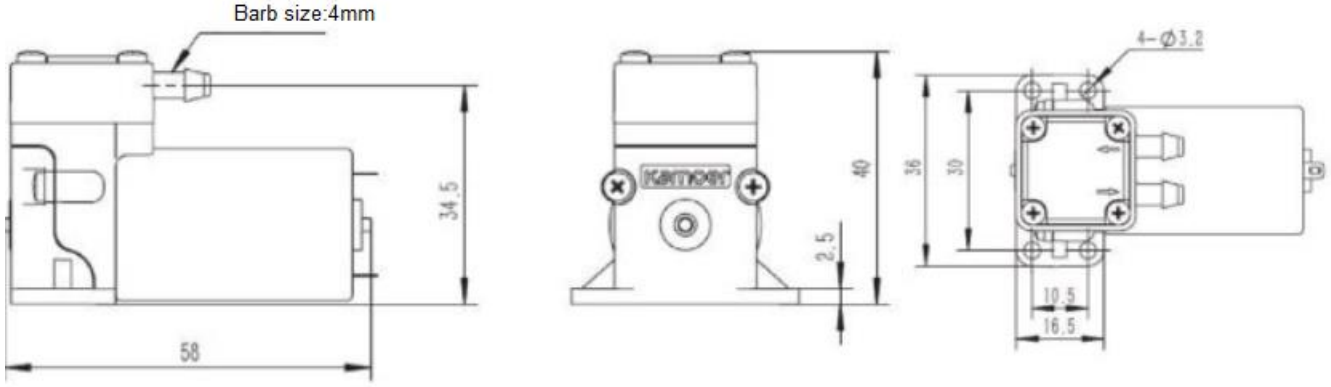


## 4. Tubing Installation Procedure

- Red wire: positive
- Black wire: negative
- White wire: speed control (PWM 10-30KHz or0-5VDC)
- Yellow wire: motor speed feedback

