INSTALLATION MANUAL

100 Series Submersible Level Sensors





TVL Series
Level Process Display Controller

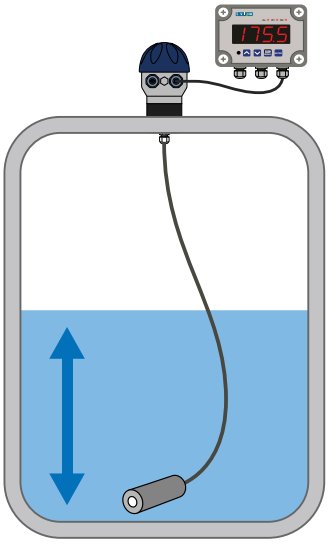

Chemical Resistant Industrial Level Sensors + Displays

ICON™ PROCESS CONTROLS
Corrosion-Free Instrumentation Equipment

www.iconprocon.com | sales@iconprocon.com | 905.469.9283

INTRODUCTION

Levelpro Submersible Level Transmitters are manufactured for years of trouble free service in tough industrial applications. The **100 Series** Levelpro Submersible Level Transmitter measures the height of liquid above the position of the sensing diaphragm of the transmitter located inside the tank referenced to atmospheric pressure. The transmitter consists of a ceramic piezo-resistive sensing element, encased in PVC, PVDF, PP, or 316 SS housing.

The Large Diameter flush diaphragm is non-clogging and damage resistant to floating solids.

The 1**00 Series** transmitter is equipped with a high tensile strength FEP (Teflon) shielded and vented cable. and contains an internal non-wetted weight and utilizes Kalrez O-ring seals The Ventilation tube in the cable automatically compensates for changes in atmospheric pressure above the tank.

⚠ **Excellent Chemical Compatibility PVC | PVDF | PP | 316SS**

⚠ **Slim Design for Tight Applications**

⚠ **Large Diameter, Non-Clogging, Damage Resistant, Ceramic Diaphragm**

1. GENERAL INFORMATION

1.1 Information on the Operating Manual

This operating manual contains important information on proper usage of the device. Read this operating manual carefully before installing and starting up the pressure measuring device.

Adhere to the safety notes and operating instructions which are given in the operating manual. Additionally applicable regulations regarding occupational safety, accident preven-tion as well as national installation standards and engineer-ing rules must be complied with!

This operating manual is part of the device, and should be kept nearest its location, always accessible to all employees.

This operating manual is copyrighted. The contents of this operating manual reflect the version available at the time of printing. It has been issued to our best knowledge. Levelpro is not liable for any incorrect statements and their effects.

1.2 Symbols Used

⚠ **DANGER!** – Dangerous Situation, which may result in death or serious injuries

⚠ **WARNING!** – Potentially Dangerous Situation, which may result in death or serious injuries

⚠ **CAUTION!** – Potentially Dangerous Situation, which may result in minor injuries

⚠ **CAUTION!** – Potentially Dangerous Situation, which may result in physical Damage

NOTE : tips and information to ensure a failure-free operation

⚠ **WARNING!** To avoid operator hazards and damages of the device, the following instructions have to be worked out by qualified technical personnel.

1.3 Limitation of Liability

By non observance of the operating manual, inappropriate use, modification or damage, no liability is assumed and warranty claims will be excluded.

1.4 Intended Use

The **Levelpro** Level Sensors have been developed for continuous level measurement. It is the operator's responsibility to check and verify the suitability of the device for the intended application. If any doubts remain, please contact our technical department in order to ensure proper usage and compatibility . **Levelpro** is not liable for any incorrect selections and their effects!

Permissible media are liquids (no solids or frozen media), specified in the data sheet. In addition it has to be ensured, that this medium is compatible with the any wetted parts of the level sensor.

The technical data listed in the current data sheet are engaging and must be complied with. If the data sheet is not available, please order or download it from our homepage. **(http://www.iconprocon.com)**

WARNING! – Danger through improper usage!

1.5 Package contents

Please verify that all listed parts are undamaged included in the delivery and check for consistency specified in your order:

- **Probe**
- **Mounting Instructions**

2. PRODUCT IDENTIFICATION

The device can be identified by its manufacturing label.

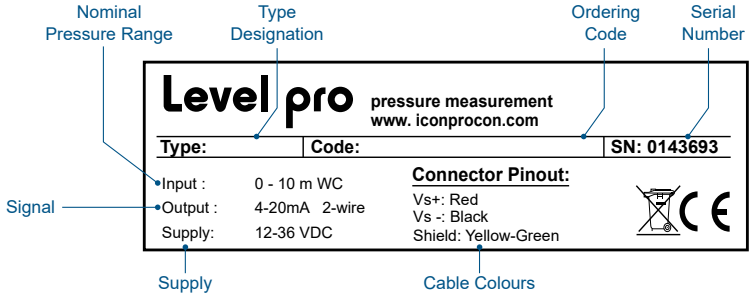

Fig. 1 Manufacturing Label

3. MECHANICAL INSTALLATION

3.1 Mounting and safety instructions

WARNING! Install the device only when depressurized and not connected to power source!

WARNING! This device may only be installed by qualified technical personnel who has read and under stood the operating manual!

Handle this high sensitive electronic precision measuring device with care, both in packed and unpacked condition!

There are no modifications/changes to be made on the device.

Do not throw the package/device!

To avoid damaging the diaphragm, remove packaging and protective cap directly before starting assembly. The delivered protective cap has to be stored!

Place the Protective Cap on the pressure port again immediately after disassembling.

Handle the unprotected diaphragm very carefully - it is very sensitive and may be easily damaged.

Do not use any force when installing the device to prevent damage of the device and the plant!

When placing the device into operation or after mainte nance work, the probe has to be submerged slowly into the medium! A rough immersion into the medium can damage or destroy the diaphragm.

If there is any danger of damage by lightning or overpressure when the device is installed outdoor, we suggest putting a sufficiently Sized overpressure protection device between the supply or switch cabinet and the device

3.2 Installation Steps for Probe

- Carefully remove the pressure measuring device from the package and dispose of the package properly.
- Mount the device according to your demands.
- If the probe has been delivered without mounting accessories. Please Contact **Icon Process Controls** (**www. iconprocon.com**) for tank connection **LP100 Junction Box**

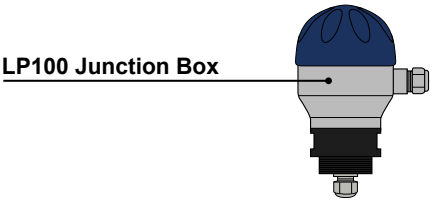

3.3 Removing the Protection Cap

For the protection of the diaphragm, some of the probes have a protection device. The device must be removed before installation

- If it is necessary for your application to remove the protection cap, this has to be done with utmost care. To prevent damage of the diaphragm, please follow these instructions.

3.4 Installation Procedure - Sensors and Junction Box

1

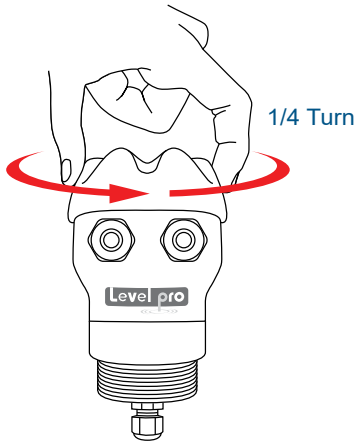

Take Junction Box Open Lid

2

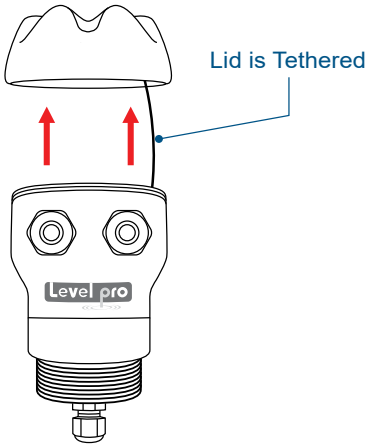

Open Lid

3

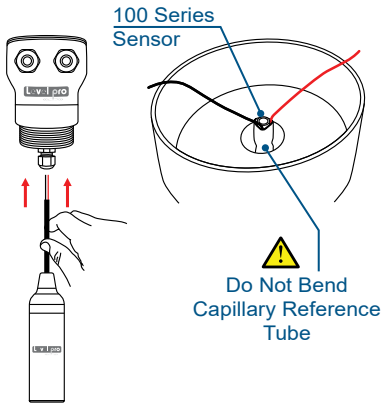

1. Feed 100 Series Wire Red and Black in Junction Box
2. Tighten Cord Grip

4

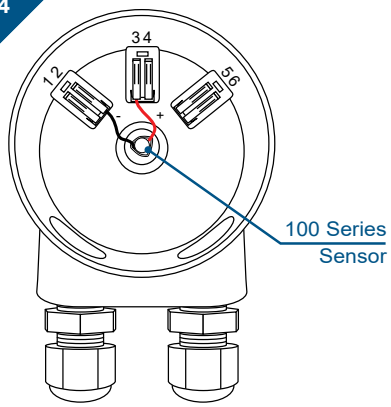

Connection 100 Series Wire
Red wire 3 Terminals
Black wire 2 Terminals

5

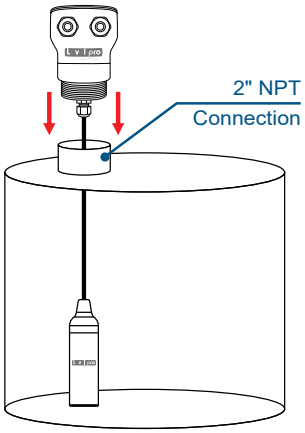

Carefully Lower the 100 Series

6

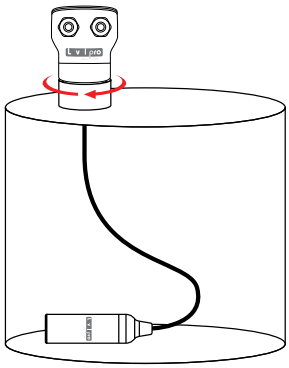

Thread into Fitting

4. WIRING DIAGRAM

Wiring to a Loop Powered Display :

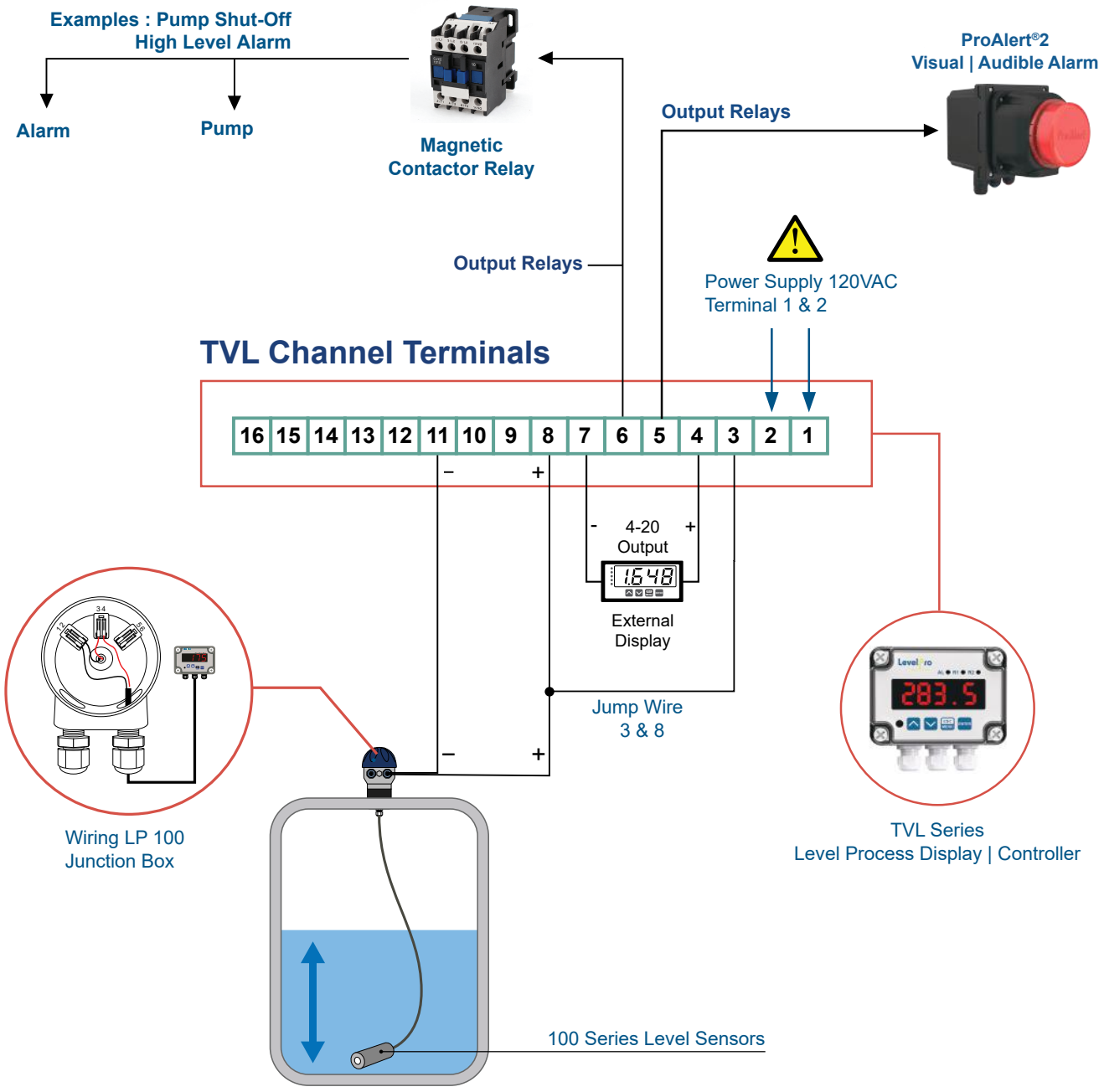

Wiring to the Levelpro Series Tank Level Controller

- The default for the Input One is 4 mA and this will not change.
- Typically **4mA reflects the Empty Setting** will be the tank is empty (example. 000.0 Gallons, 000.0 inches, 000.0 feet etc.).
- Typically **20mA reflects the Full setting** will be when the tank is full (example: 500.0 Gallons, 120.0 inches, 10.0 feet, etc.)
- **Shielded cable is recommended for control loop wiring.**
- **Use the Red wire as the (+) and the Black wire as the (-)**

4.1 Wiring Diagram

100 Series with Sentinel LT Series



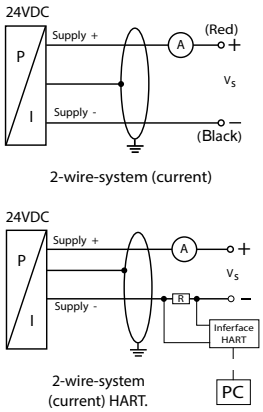

100 Series

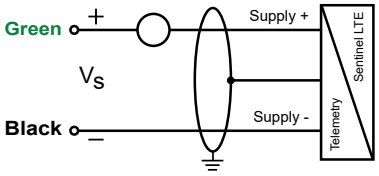

2-Wire-System | 4-20mA



Sentinel LT

4.2 Connection Diagram

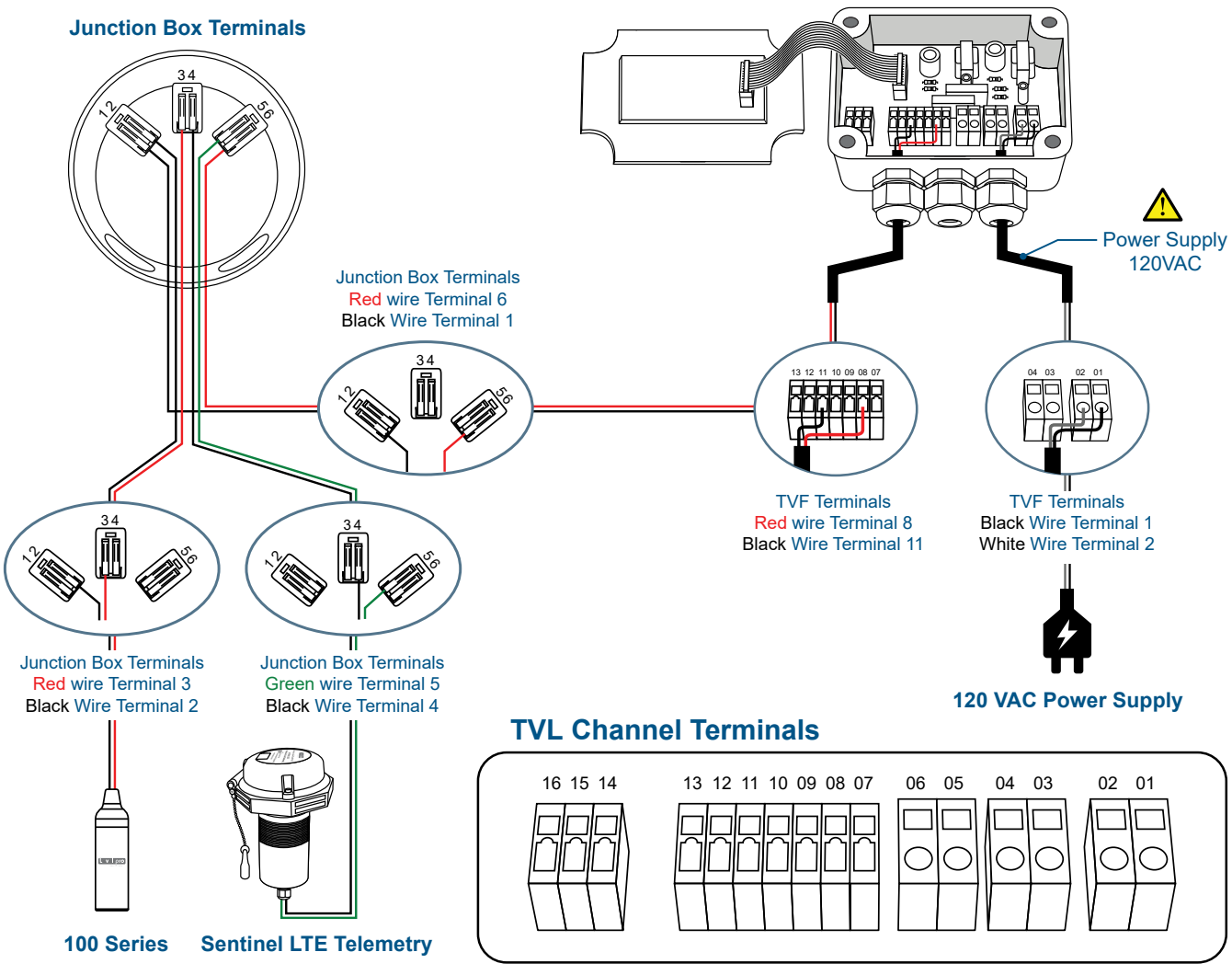

5. SERVICE | REPAIR

5.1 Return

Before every return of your device, whether for recalibration, decalcification, modifications or repair, it has to be cleaned carefully. You have to enclose a notice of return with detailed defect description when sending the device. If your device came in contact with harmful substances, a declaration of decontamination is additionally required. Appropriate forms can be downloaded from our homepage (**www.iconprocon.com**). Should you dispatch a device without a declaration of decontamination and if there are any doubts in our service department regarding the used medium, repair will not be started until an acceptable declaration is sent.

⚠ If the device came in contact with hazardous substances, certain precautions have to be complied with for purification!

6. DISPOSAL

The device must be disposed according to the European Directives 2002/96/EG and 2003/108/EG (on waste electrical and electronic equipment) Waste of electrical and electronic equipment may not be disposed by domestic refuse!



⚠ **WARNING!** Depending on the measuring medium, deposit on the device may cause danger for the user and the environment. Comply with adequate precau-tions for purification and dispose of it properly.

7. WARRANTY CONDITIONS

The warranty conditions are subject to the legal warranty period of 12 months from the date of delivery. In case of improper use, modifications of or damages to the device, we do not accept warranty claims. Damaged diaphragms will also not be accepted. Furthermore, defects due to normal wear are not subject to warranty services.

TECHNOLOGY

The **Levelpro** pressure transmitter is placed near or on the bottom of the tank. A ceramic pressure diaphragm within the pressure transmitter is exposed on one side to the application liquid. The other side is exposed to the reference pressure via a small ventilation tube located inside of the cable. The difference in pressure between liquid and reference pressures will slightly deflect the diaphragm. The deflection of the diaphragm is measure by a built-in microprocessor located inside the ceramic diaphragm.which is converted into a 4-20mA two wire current signal proportional the height of the liquid. Make sure that **Levelpro** Transmitter is compatible with the application liquid media.

SAFETY PRECAUTIONS

⚠ **About this Manual :** PLEASE READ THE ENTIRE MANUAL PRIOR TO INSTALLING OR USING THIS PRODUCT. This manual includes information on all versions of the **Levelpro** Pressure Level Transmitters Please refer to the part number located on the transmitter label to verify the exact model which you have purchased.

⚠ **User's Responsibility for Safety :** Levelpro offers a wide range of liquid level sensors and technologies. While each of these technologies are designed to operate in a wide variety of applications, it is the user's responsibility to select a technology that is appropriate for the application, install it properly, perform tests of the installed system, and maintain all components. The failure to do so could result in property damage or serious injury.

⚠ **Proper Installation and Handling :** Only properly-trained staff should install and/or repair this product.

⚠ **Wiring and Electrical :** CAUTION - Do not exceed specified supply voltage rating of 30 VDC. Permanent damage not covered by warranty will result. **This device is not designed for 120 or 240 volt AC operation**. Use only the specified voltage found in the specification sections.

⚠ **Temperature and Pressure :** The **Levelpro** series are designed for use in the specified application temperatures referred to in the specification section.

⚠ **Material Compatibility :** Make sure that the model which you have selected is chemically compatible with the application liquids.

⚠ **Make a Fail-Safe System :** Design a fail-safe system that accommodates the possibility of transmitter failure or battery power loss. In critical applications, **Levelpro** recommends the use of redundant backup systems and alarms in addition to the primary system.

8. GETTING STARTED

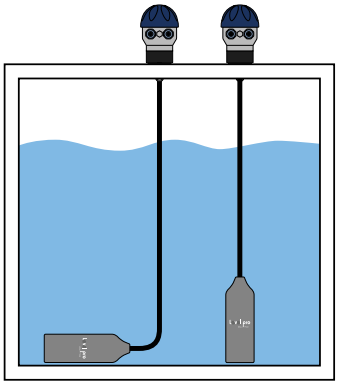

Pressure transmitters are designed to be completely submersed within the application fluid. The transmitters can either rest along the bottom of the tank or be suspended at any desired level within the tank. Please note that the physical location of the level transmitter will indicate the lowest level of measurement within the tank.
For example: mounting the transmitter 2 feet from the bottom of the tank, then the lowest reading of liquid will be 2 feet from the bottom.

How to convert Pressure into Liquid Height?

Pressure transmitters are all defined by the pressure range or distance range. To convert pressure to Liquid Height, use the following ratio:

1 psi = 2.31 feet of water
or
1 psi = 0.704 meters of water

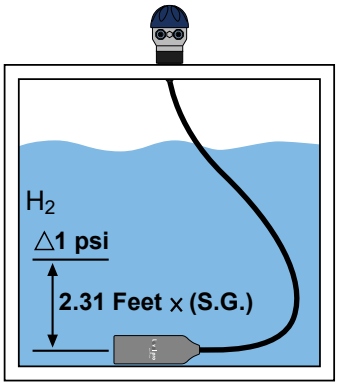

Therefore, a 10 psi transmitter will have a
Liquid Height = 23.1 feet

10 psi x 2.31'/psi = 23.1'
or
23.1'/2.31 = 10 psi

With the above ratio, you can always find the Liquid Height or Water Column (wc) of any Levelpro pressure transmitter

GETTING STARTED (Continued)

How does Specified Gravity affect pressure transmitters?

The Specific Gravity (SG) of a liquid will not change the pressure of the transmitter, but will affect how the transmitter reads the liquid height. Remember, liquids with a SG < 1.0 are lighter than water (Oil) and liquids with a SG > 1.0 are heavier than water. (Sulphuric Acid)

- Water has a SG = 1.0.
- A SG <1.0 required more liquid (a taller water column) to equal the same pressure or height as with water.
- A SG >1.0 requires less liquid (shorter water column) to equal the same pressure or height as with water.

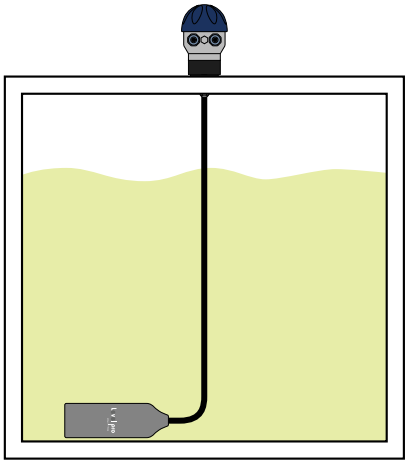

SG = 0.9

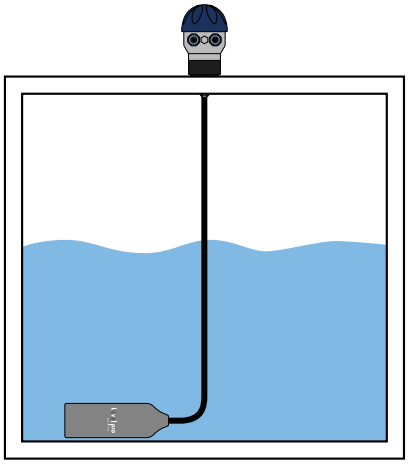

SG = .0 (Water H_{20})

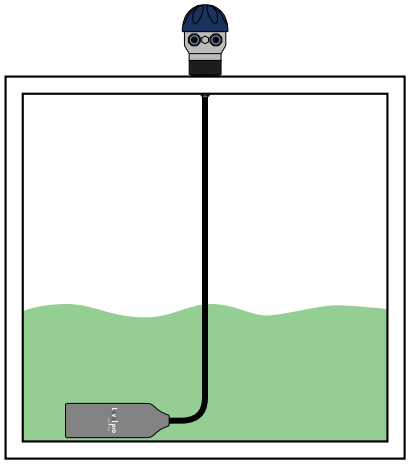

SG = 1.2

Levelpro sensors are provided in distance measurement ranges i.e. 0-14 ft, 0-20 ft, 0-33 ft etc. To calculate the maximum range or the liquid that a particular sensor will measure, use the following formula:

Maximum Liquid Height (feet) = Maximum Liquid Height of Liquid / SG

Example : 0-14 ft transmitter installed in a liquid with a maximum height of 12 feet and a SG=0.9 will have a Sensor Height with a range 0-14' = 14 feet /0.9 = 15.5'…so it can measure more liquid than the 14' range due to the SG being below 1 (H_{20} water)

Example : Compare the Maximum Liquid Height of a liquid with a SG = 1.5.

- SG = 1.5 : 0-20' Range transmitter will have a Maximum Sensing Height (Liquid) = 20/1.5 = 15 ft
- SG = 1.0 : 0-20' Range transmitter will have a Maximum Sensing Height (Liquid) = 20/1 =20 ft

When the Specific Gravity is less than 1.0, the Maximum Liquid Height of the transmitter will increase. The reverse is true by increasing the Specific Gravity. With a SG = 1.5, the **Maximum Sensing Height (Liquid) = 15' with a Transmitter with a Range of 0-20 ft Transmitter**

Note : Identifying the correct specific gravity for the fluid is critical in understanding the operational range of the pressure transmitter.

GETTING STARTED (Continued)

How to configure a panel meter when a pressure transmitter is used?

This method works with the Levelpro Series level displays & controllers. These panel meters are configured using the linear SCALE function. The settings are as follows:

Settings	Default	Represents	Typical Setting
Input 1= Empty	4.0	Input Current @Empty	4.0mA
Input 2 = Full	20.0	Input Current @Full	20.0mA

Remember, pressure transmitters are configured so 0 psi/ft = 4 mA and the maximum psi/ft = 20 mA. **Levelpro** pressure transmitter applications will not use the full range of the transmitter. Therefore, a full tank will typically have a current less than 20 mA.

Note: The values for empty and full represent what the display will show when the tank is either Empty or Full. Empty and Full must be the same units (example: Gallons, Inches, percent).

9. INSTALLATION

The Levelpro Series is designed to operate while submerged in the actual application liquid. Avoid installing the level transmitter along the bottom of the tank if materials such as sludge will build up and coat/cover the transmitter. This also includes any debris that will settle along the bottom of the tank. In these applications, it is best to suspend the transmitter above the highest level of sludge/debris that will occur.

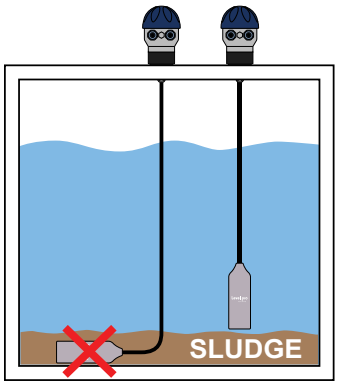

1. **Location :** Select a location where the temperature of the transmitter will be within the specification of the sensor.
2. **Position :** The transmitter is not position sensitive.
3. **Mounting :** The transmitter can be mounted via several methods. It can be suspended from the cable, it can be placed resting on the bottom of the tank in either horizontal or vertical orientation, or it can be attached to a pipe or hardwired using the LP100 conduit box on the top of the housing.

Avoid installations where other tank requirements will cause the transmitter to move or swing. Example: A mixer blade could cause the level transmitter to whip around within the tank. An alternative would be to move the transmitter to a more stable section of the tank or to install the Transmitter inside a still well/drop tube. This will minimize the effects created by the mixer. Termination: The cable for the transmitter is typically terminated at a junction box located on top of the tank. Since the vent tube is contained within the cable, the pressure within the junction box must always be the same as the reference (typically atmospheric) pressure for the liquid. The inside of the function box must be clean, dry and free of moisture. (A descant can be provided) Add the optional fitting **LP 100** to complete the package. The **LP 100** features a 2" NPT thread for mounting and a liquid tight connector to seal the cable interface, and a Gortex breather that allows for the transfer of air, but not moisture.

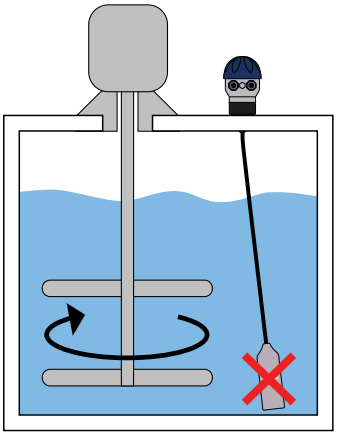

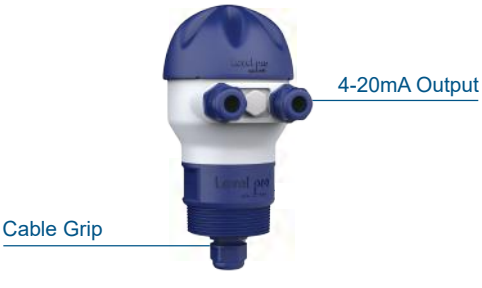

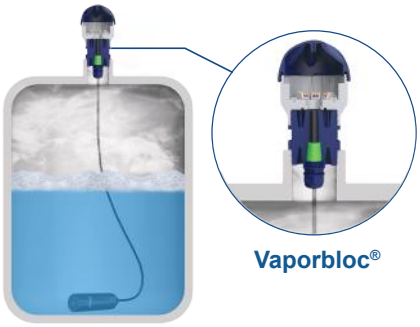

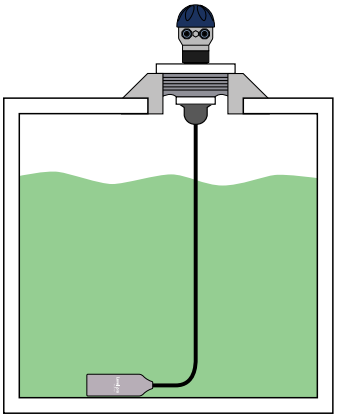

Note: Use caution when sealing the cable at the top of the tank. There is a ventilation/reference tube located within the cable. The purpose of this tube is provide a comparison between atmospheric pressure and the pressure that is being exerted on the sensing diaphragm within the tank. The reference tube must be open and free to allow air to flow back to the pressure diaphragm. Avoid blocking or bending the ventilation tube by compressing the cable. Always keep the cable termination clean, dry and free of moisture and prevent liquid from entering the vent tube. The LP100 Installation Junction Box comes with a Gortex breather to allow for air to pass but not moisture. It also has the cable grip located at the bottom to secure the sensor.

10. MAINTENANCE

After final installation of the Levelpro transmitter and its companion receiver (TruVu), no routine maintenance is required. A periodic check of system calibration is suggested. Be sure to include a brief description of the problem plus any relevant application notes. Contact customer service to receive a return goods authorization number before shipping.
Maintenance should consist of inspection to see that the transmitter is free from debris and not coated with any substance, which would prevent liquid from freely entering and leaving the transmitter. If this occurs, the transmitter should be cleaned.

Testing the Transmitter:

1. First, verify that the sensor is wired correctly.
2. Next, check if the power supply is providing the required power.
3. Finally confirm that the loop resistance is not exceeding the sensor's specification.

If transmitter is not functioning properly, isolate the transmitter from the system and wire as shown below. Be sure to remove the sensor from the classified area when preforming this test. Multi - Meter should read 4mA with the transmitter out of liquid.

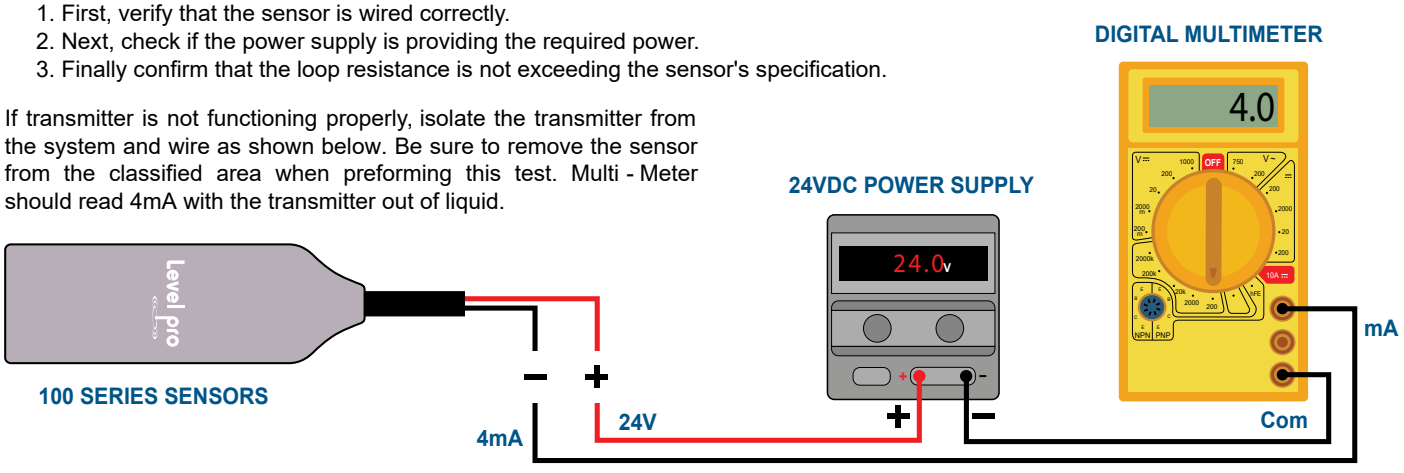

11. WARRANTY, RETURNS & LIMITATIONS

Icon Process Controls warrants to the original purchaser of its products that such products will be free from defects in materials and workmanship under normal use and service in accordance with instructions furnished by Icon Process Controls for a period of one years from the date of sale of such products. **Icon Process Controls** obligation under this warranty is solely and exclusively limited to the repair or replacement, at Icon's option, of the products or components, which Icon examination determines to its satisfaction to be defective in material or workmanship within the warranty period.
Icon Process Controls must be notified within thirty (30) days pursuant to the instructions below of any claims of lack of conformity under this warranty . Any product repaired under this warranty will be warranted only for the remainder of the original warranty period. Any product provided as a replacement under this warranty will be warranted for the full 1 year from the data of sale.

Returns:

Products cannot be returned to **Icon Process Controls** without Icon's prior authorization. To return a product that is thought to be defective please submit a customer return (MRA) request form and follow the instructions therein. All warranty and non-warranty product returns to Icon Process Controls must be shipped prepaid and insured. Icon will not be responsible for any products lost or damaged in shipment.

Limitations:

This warranty does not apply to products which :

1) are beyond the warranty period or are products for which the original purchaser does not follow the warranty procedures outlined above;

2) have been subjected to electrical, mechanical or chemical damage due to improper, accidental or negligent use;

3) have been modified or altered;

4) anyone other than service personnel authorized by Icon have attempted to repair;

5) have been involved in accidents or natural disasters; or

6) are damaged during return shipment to Icon.

Icon Process Controls reserves the right to unilaterally waive this warranty and dispose of any product returned to Icon where :

1) there is evidence of a potentially hazardous material present with the product; or

2) the product has remained unclaimed at Levelpro for more than 30 days after Icon Process Controls has dutifully requested disposition.

This warranty contains the sole express warranty made by Levelpro in connection with its products. ALL IMPLIED WARRANTIES, INCLUDING WITHOUT LIMITATION, THE WARRANTIES OF MERCHANTABILITY AND FITNESS FOR A PARTICULAR PURPOSE, ARE EXPRESSLY DISCLAIMED. The remedies of repair or replacement as stated above are the exclusive remedies for the breach of this warranty. IN NO EVENT SHALL LEVELPRO BE LIABLE FOR ANY INCIDENTAL OR CONSEQUENTIAL DAMAGES OF ANY KIND INCLUDING PERSONAL OR REAL PROPERTY OF FOR INJURY TO ANY PERSON. THIS WARRANTY CONSTITURES THE FINAL, COMPLETE AND EXCLUSIVE STATEMENT OF
WARRANTY TERMS AND NO PERSON IS AUTHORIZED TO MAKE ANY OTHER WARRANTIES OR REPRESENTATIONS ON BEHALF OF **Icon Process Controls**.

ICON™ PROCESS CONTROLS Corrosion-Free Instrumentation Equipment

For technical support please contact us at support@iconprocon.com | visit www.iconprocon.com | 905. 469.9283
Please ensure you have the Part and Serial number available

LevelPro® 100 Series

Continuous Submersible Level Transmitter



ICON™ PROCESS CONTROLS

Corrosion-Free
Instrumentation Equipment

www.iconprocon.com | sales@iconprocon.com | 905.469.9283