Quick Start Manual



ICON™ PROCESS CONTROLS Corrosion-Free Instrumentation Equipment

Read the user's manual carefully before starting to use the unit.
Producer reserves the right to implement changes without prior notice.

 © Icon Process Controls Ltd.

Safety Information

- De-pressurize and vent system prior to installation or removal
- Confirm chemical compatibility before use
- **DO NOT** exceed maximum temperature or pressure specifications
- **ALWAYS** wear safety goggles or face-shield during installation and/or service
- **DO NOT** alter product construction

Warning | Caution | Danger

Indicates a potential hazard. Failure to follow all warnings may lead to equipment damage, injury, or death.

Hand Tighten Only

Over tightening may permanently damage product threads and lead to failure of the retaining nut.

Note | Technical Notes

Highlights additional information or detailed procedure.

Do Not Use Tools

Use of tool(s) may damage produced beyond repair and potentially void product warranty.



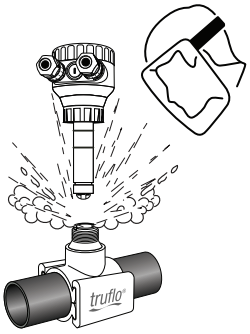

Personal Protective Equipment (PPE)

Always utilize the most appropriate PPE during installation and service of Truflo products.



Pressurized System Warning

Sensor may be under pressure. Take caution to vent system prior to installation or removal. Failure to do so may result in equipment damage and/or serious injury.

Please ensure that the Instruments are not to be subject to water hammer or pressure spikes! Always Pressure Test System with H2O Prior to Initial Start-Up

Before Before installation be certain the appropriate instrument has been selected considering operating pressure, full scale pressure, wetted material requirements, media compatibility, operating temperature, vibration, pulsation, desired accuracy and any other instrument component related to the service application including the potential need for protective attachments and/or special installation requirements. Failure to do so could result in equipment damage, failure and/or personal injury. Ensure only qualified personnel personnel are permitted to install and maintain this instrument.

Pressurize System Warning

Sensor may be under pressure, take caution to vent system prior to installation or removal. Failure to do so may result in equipment damage and/or serious injury.

Please Ensure Full Pipe

TK Series can be installed in a horizontal or vertical direction. Please ensure enough length of straight pipe to avoid turbulence that can effect readings.

Min 10x Pipe Diameters Upstream 3x Pipe Diameters Downstream

A Bag Filter or Y Strainer Filtering Device upstream to Avoid the Paddle Wheel from being damaged by the solids or fibers - max 10% Particle Size - Not to Exceed .5mm Cross Section or Length. Please do not flush the pipe after the Flow Meter is installed with compressed air this may damage the ceramic shaft and will void warranty.

 © Icon Process Controls Ltd.

Industry's Most Accurate & Reliable Paddle Wheel Flow Meters

The TI Series insertion plastic paddle wheel flow meter has been engineered to provide long-term accurate flow measurement in tough industrial applications.

The paddle wheel assembly consists of a engineered Tefzel® paddle and micro-polished zirconium ceramic rotor pin and bushings.

High performance Tefzel® and Zirconium materials have been selected due to their excellent chemical and wear resistant properties.

- ½" – 24" Line Sizes
- Flow Rate | Total
- Pulse | 4 – 20mA | Voltage Outputs

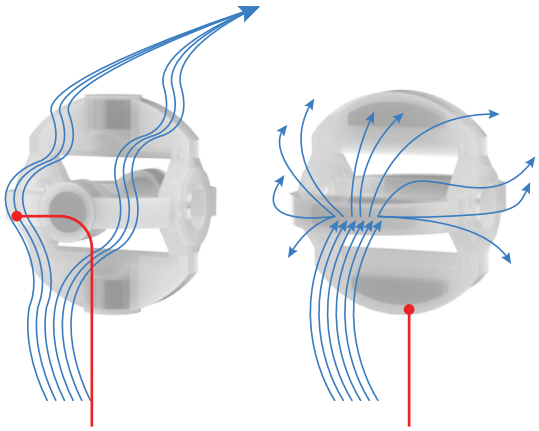

New ShearPro® Design

- Contoured Flow Profile
- Reduced Turbulence = Increased Longevity
- 78% Less Drag than Old Flat Paddle Design*

*Ref: NASA "Shape Effects on Drag"

Tefzel® Paddle Wheel

- Superior Chemical And Wear Resistance vs PVDF

Zirconium Ceramic Rotor | Bushings

- Up to 15x the Wear Resistance
- Integral Rotor Bushings Reduce Wear and Fatigue Stress

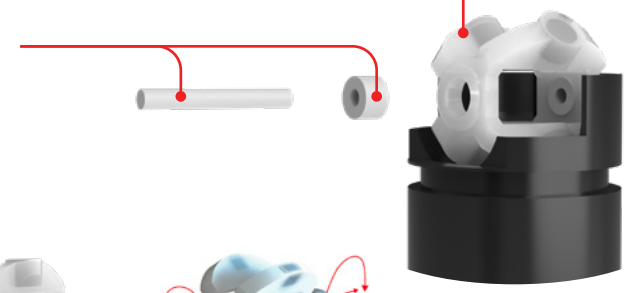

360° Shielded Rotor Design

- Eliminates Finger Spread
- No Lost Paddles

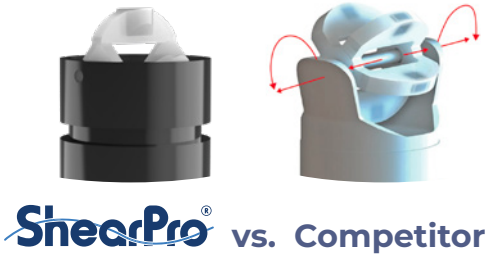

 © Icon Process Controls Ltd.

Technical Specifications

General		
Operating Range	0.3 to 33 ft/s	0.1 to 10 m/s
Pipe Size Range	½ to 4"	DN15 to DN100
Linearity	±0.5% of F.S @ 25°C | 77°F	
Repeatability	±0.5% of F.S @ 25°C | 77°F	
Fluid	Water or Chemical Liquid-Viscosity Range: .5-20 centistokes	
Flow Velocity	10 m / s max	
Low Cut	0.3 m / s min.	
Operating Pressure	150 PSI (10 Bar) @ Ambient Temp-Non Shock	
Range Ability	10 : 1	
Response Time	Real Time	
Flow Total Meter	Range = 0~999999 ; Unit = Gallon or Liter or Ton (KL) Selectable	
Repeatability	Range = 0.0~999.9 ; Unit = GPM or LPM or CMH Selectable	
Accuracy	± 0.5% of F.S. @ 25°C	
Wetted Materials		
Sensor Body	PVC (Dark) | PP (Pigmented) | PVDF (Natural)	
O-Rings	FKM | EPDM* | FFKM*	
Rotor Pin | Bushings	Zirconium Ceramic | ZrO2	
Paddle | Rotor	ETFE Tefzel®	
Electrical		
Operating Voltage Battery	3.0 VDC	
Battery	Lithium Battery (CR2477T)	
Life of battery	>1 Year Normal >2 Years Eco Mode	
Max. Temperature/Pressure Rating - Standard and Integral Sensor | Non-Shock		
PVC	180 psi @ 68°F | 40 Psi @ 140°F	12.5 bar @ 20°C | 2.7 bar @ 60°C
PP	180 psi @ 68°F | 40 psi @ 190°F	12.5 bar @ 20°C | 2.7 bar @ 88°C
PVDF	200 psi @ 68°F | 40 psi @ 240°F	14 bar @ 20°C | 2.7 bar @ 115°C
Operating Temperature		
PVC	32°F to 140°F	0°C to 60°C
PP	-4°F to 190°F	-20°C to 88°C
PVDF	-40°F to 240°F	-40°C to 115°C
Outputs		
TKB Series	Flow | Frequency Pulse - Total	
Standards and Approvals		
CE | FCC | RoHS Compliant		

*Optional

 © Icon Process Controls Ltd.

TKB Series — Battery Powered
In-Line Paddle Wheel Flow Meter

truflo®

Model Selection

TKB - [20] - [P] - [T] - [ ] **NOTE:** Leave blank for standard options

Pipe Size	Material	End Connections	Seals
15: ½" **50:** 2" **20:** ¾" **80:** 3" **25:** 1" **100:** 4" **40:** 1½"	**P:** PVC **PP:** PP **PF:** PVDF	Sch 80 Soc (Standard on PVC) **T:** NPT (Standard on PP/PVDF, available on PVC) **F:** ANSI 150lb Flange **B:** Butt Fusion	FKM (std) **E:** EPDM **K:** FFKM | Kalrez®

Exploded View

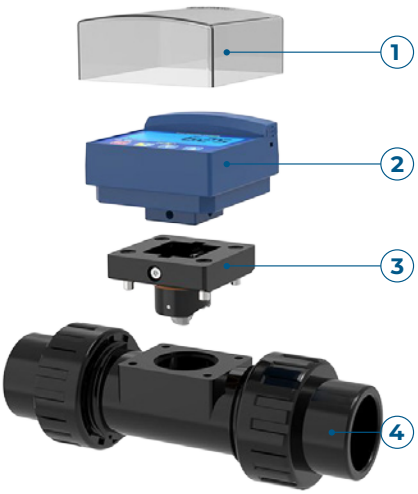

1. Polycarbonate Cover
2. Flow Controller
3. Hall Pickup Sensor
4. Redesigned Rotor Assembly
5. Body | PVC | PP | PVDF *
6. Re-inforced Inserts
7. Shearpro Contoured Rotor
8. Rotor Bushings
9. Rotor Pin

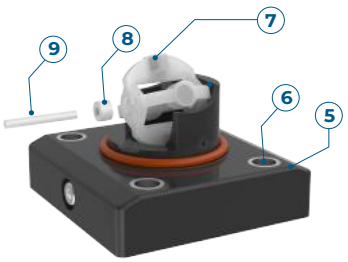

Zirconium Rotor Pin & Bearings



Removable Cover

LPM | GPM |CMH



Waterproof Battery Holder Standard "C" Type Battery

Screen Backlight

Battery Life Indication



Removable Cover (No Tools Required)



4" ← ½" Same Controller | Rotor Assembly for All Sizes

 © Icon Process Controls Ltd.

TKB Series — Battery Powered
In-Line Paddle Wheel Flow Meter

truflo®

Programming

SET Select/Save/Continue | F Move selection left | ▼ ▲ Change digit value

Press SET and hold for 3 seconds, then press ▼ or ▲ to select

Flow Rate Units: GPM | LPM | CMH → Flow Total | Totalizer Units: GPM | LPM | CMH

STEPS	DISPLAY	OPERATION
1 Home Screen SET + F 5 SEC	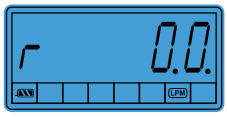	Home Screen r = Flow Rate | Default Setting
2 Set Pasword — Enter # SET		Factory Default: Lock = 8 Enter ANY Number from 0 - 9 to Set
3 Changing K Factor — K= # SET		Flow Coefficient = Input pulses x 1/k * *Only required if changing displays from one size to another i.e. 1" to 2" pipe size*
4 Display Mode — dSP.non SET		1. dSP-non | Press any key to turn on the LED back light | Default is set to 6 seconds 2. dSP-Eco | Backlight LED function is not active
5 Light On — t-5 SET	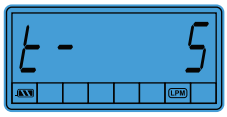	In dSP-non mode Backlight default is t-0006 | Set Duration Time (sec) of Backlight to remain On. Press any key to turn on the display to turn on LED light (> Time = < Reduced Battery Life)
5 Flow Alarm Delay — dt-10 SET		Delay Time ensures Alarm Setting only becomes active after the flow remains constant for xx seconds **Programming the High | Low Alarm** Press SET + ▲ 3 Sec to Display High Alarm Setting Press ▲ or ▼ to Enter Alarm Value. Press SET to Display Low Alarm Setting. Press ▲ or ▼ to Enter Alarm Value. The Press SET to Confirm
5 Reset Totalizer — rESEt.0 SET		1. To Prevent Totalizer reset - Enter Password Number 0-9 (excluding # 5) Flow Totalizer Reset Protection Active 2. rESEt.= 5 Default = Flow Totalizer Reset Enabled

 © Icon Process Controls Ltd.

Flow Totalizer

Display the Current Value of Flow Totalizer : Range 0~99,999,999

1. Hold the ▲ key for 3 seconds to show current value of the 7th – 8th digits
2. After releasing the ▲ key the current value of the 1st – 6th digits will be displayed

Alarm Limit of Flow Rate Meter

How to Set the Alarm Limit of Flow Rate Meter?

The **Flow Total** | **Totalizer** can be protected from an accidental reset. To set lockout program set any number from 0-9 excluding "5". The factory default unlock number 5.

Totalizer Reset ⟶ Press both ▼ & ▲ keys together for 3 SEC

Low Battery Notification

Voltage of Battery	Symbol	Status
3.0V		**Full Scale**
< 3.0V		**Mild Scale**
< 2.8V		**Low Scale** (Pilot BAT Flashing)
< 2.6V		**Low Voltage** (Pilot BAT & Display Flashing)

Displaying Flow Rate | Flow Totalizer

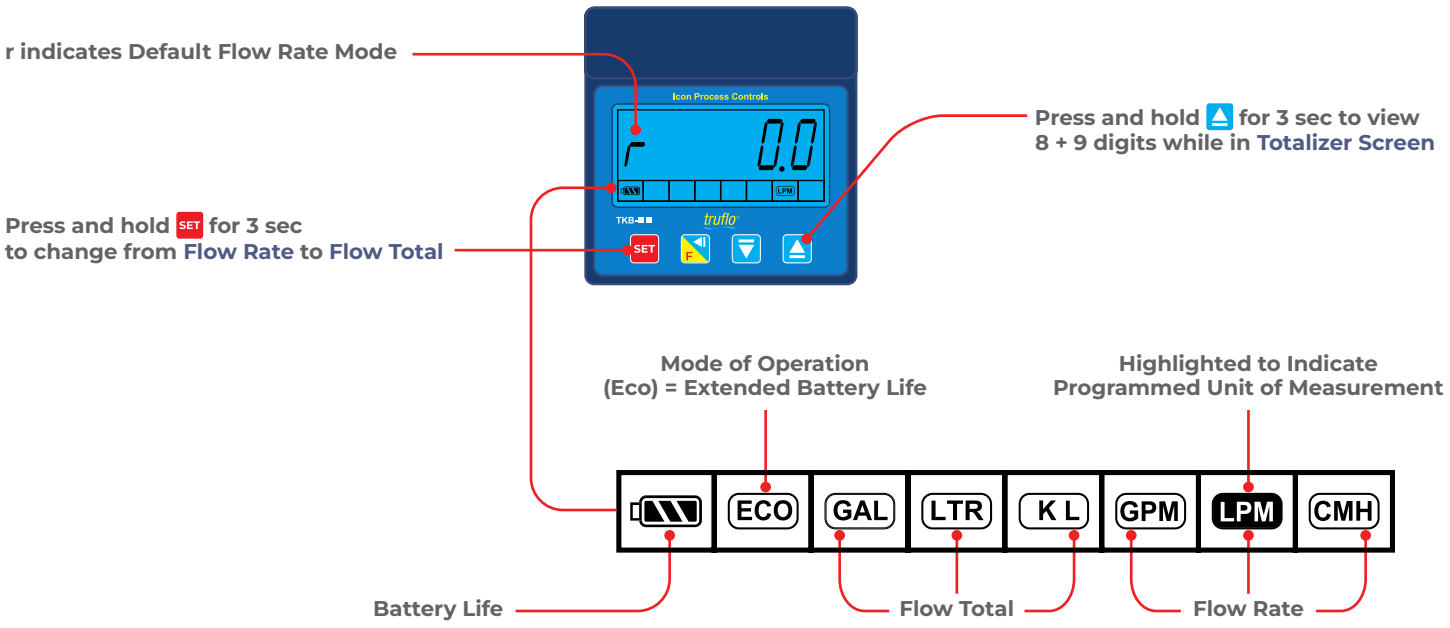

 © Icon Process Controls Ltd.

TKB Series — Battery Powered
In-Line Paddle Wheel Flow Meter

truflo®

K-Factors for TK

Size	LPM	GPM
½" | DN15	124	471
¾" | DN20	72	274
1" | DN25	54	171
1 ½" | DN40	19	72
2" | DN50	10.3	39
3" | DN80	4.7	18
4" | DN100	2.1	8

⚠ K-Factor is Pre-Programmed

Min/Max Flow Rates

Pipe Size (O.D.)	LPM | GPM	LPM | GPM
	0.3m/s min.	10m/s max
½" | DN15	3.5 | 1.0	120.0 | 32.0
¾" | DN20	5.0 | 1.5	170.0 | 45.0
1" | DN25	9.0 | 2.5	300.0 | 79.0
1 ½" | DN40	25.0 | 6.5	850.0 | 225.0
2" | DN50	40.0 | 10.5	1350.0 | 357.0
2 ½" | DN60	60.0 | 16.0	1850.0 | 357.0
3" | DN80	90.0 | 24.0	2800.0 | 739.0
4" | DN100	125.0 | 33.0	4350.0 | 1149.0

Pressure vs. Temperature Psi H_2O | Non-Shock

Nominal Size		PVC				PP				PVDF				
		30° F	71° F	106° F	121° F	-5° F	86° F	121° F	141° F	-5° F	71° F	106° F	141° F	176° F
Inches	mm	70° F	105° F	120° F	140° F	85° F	120° F	140° F	175° F	70° F	105° F	140° F	175° F	210° F
½ - 2	15-50	150	120	100	30	150	110	90	55	150	125	100	85	55
2½	65	150	120	100	NA	150	95	70	40	150	125	100	85	55
3	80	150	120	100	NA	150	95	70	40	150	125	100	85	60
4	100	150	120	100	NA	150	95	70	40	150	125	100	85	60

Dimensions

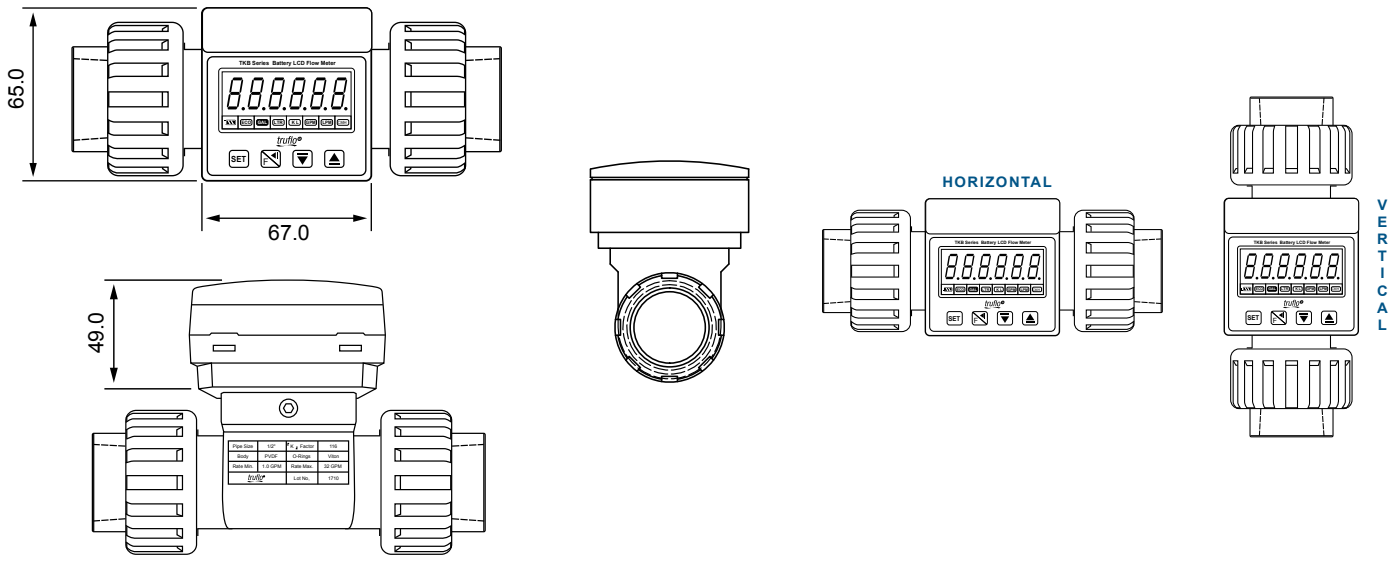

 © Icon Process Controls Ltd.

Battery Replacement

1 Lightly Press on Both Sides Battery Cover

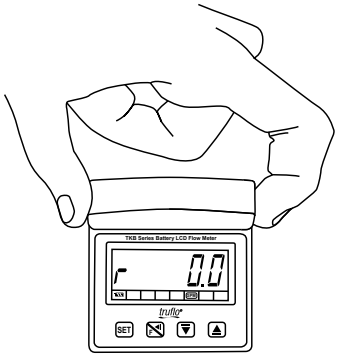

2 Remove the Battery Cover

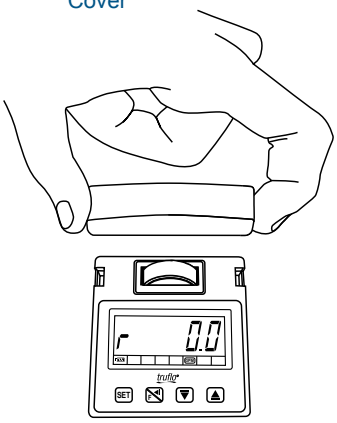

3 Remove the Battery

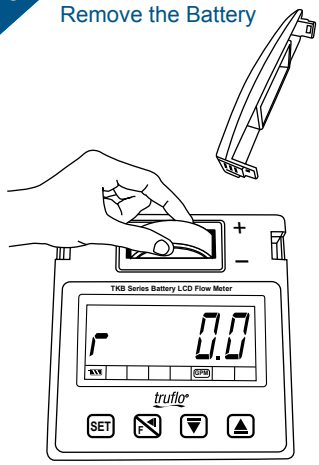

4 Insert the New Battery Ensure (+ -) orientation is correct

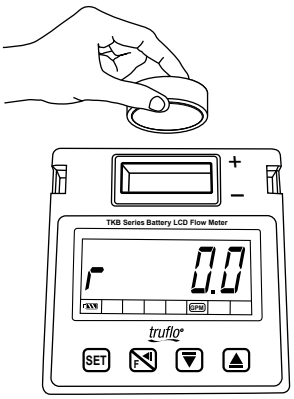

Procedure to Rotate Display

1 Use an Allen key and loosen the screws located on both side of the display

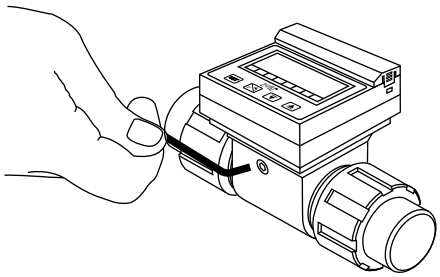

2 Lightly pull on the screws in an outwards direction Screws are Captive - Do Not Completely Remove

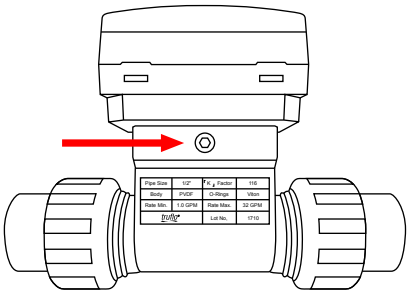

3 Lift the display

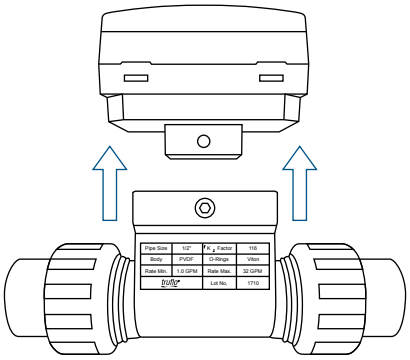

4 Rotate Display

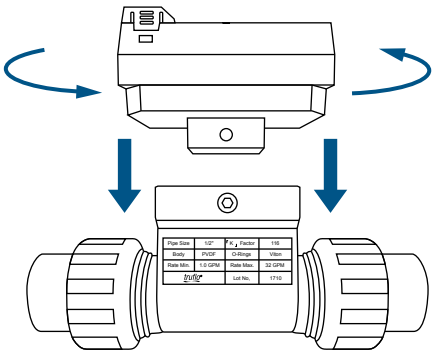

5 Reposition the Display

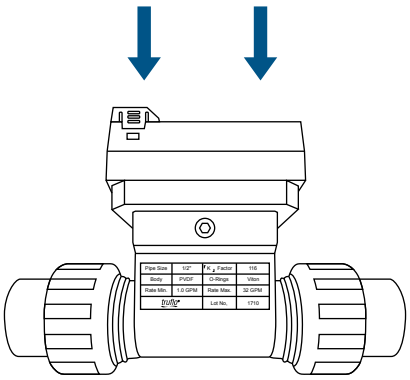

6 Tighten (Snug) the Allen Screws Both Sides

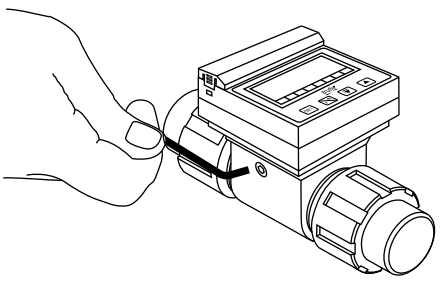

 © Icon Process Controls Ltd.

Installation Position

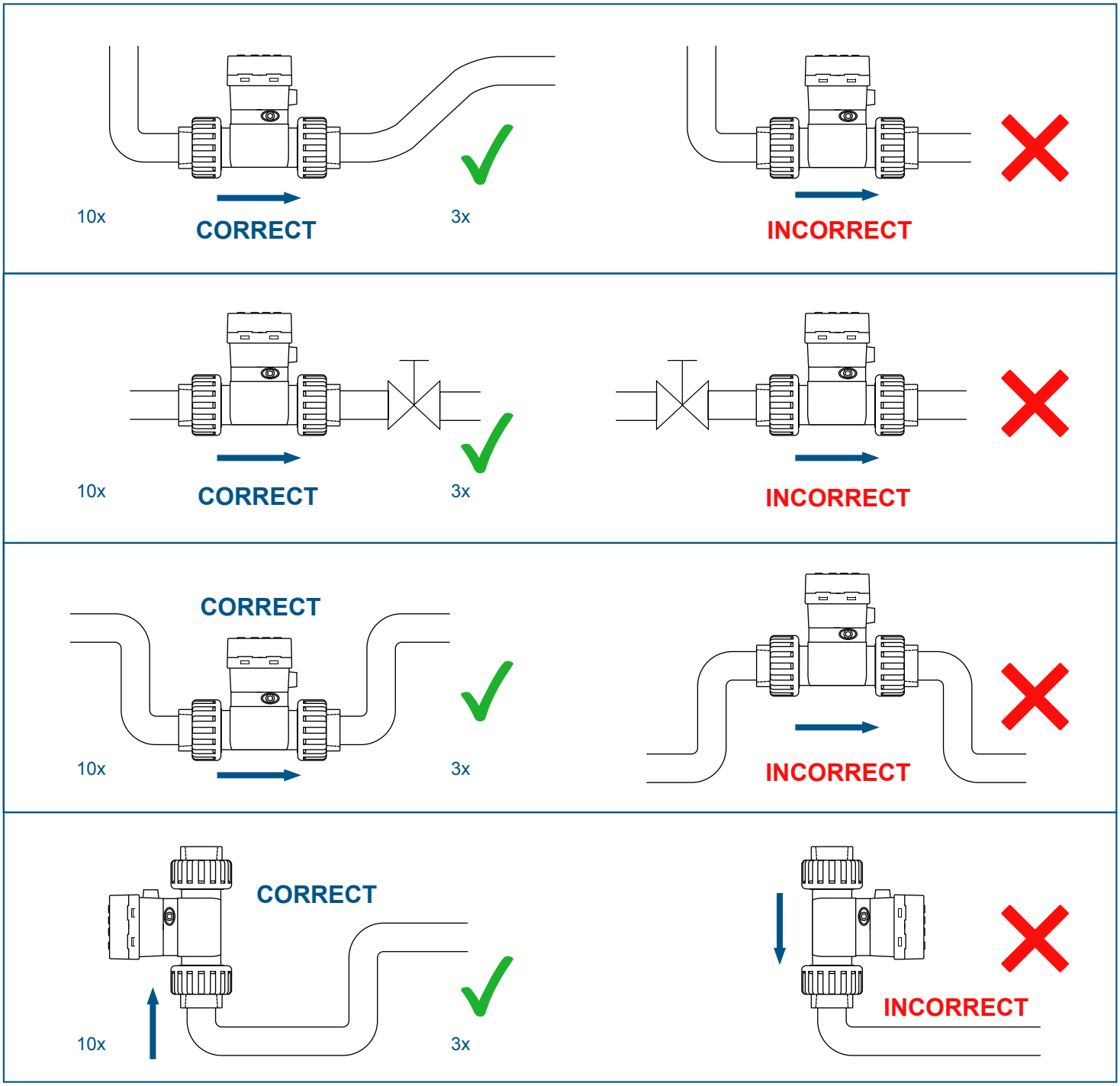

Please Ensure Full Pipe
TK Series can be installed in a horizontal or vertical direction.
Please ensure enough length of straight pipe to avoid turbulence that can effect readings.

Note: Min 10x Pipe Diameters Upstream 3x Pipe Diameters Downstream.

A Plastic Basket Strainer, Bag Filter or Y Strainer Filtering Device upstream to Avoid the Paddle Wheel from being damaged by the solids or fibers - max 10% Particle Size - Not to Exceed .5mm Cross Section or Length.
Please do not flush the pipe after the Flow Meter is installed with Compressed Air this may damage the ceramic shaft and will Void Warranty

 © Icon Process Controls Ltd.

Warranty, Returns and Limitations

Warranty

Icon Process Controls Ltd warrants to the original purchaser of its products that such products will be free from defects in material and workmanship under normal use and service in accordance with instructions furnished by **Icon Process Controls Ltd** for a period of one year from the date of sale of such products. **Icon Process Controls Ltd** obligation under this warranty is solely and exclusively limited to the repair or replacement, at Icon Process Controls Ltd option, of the products or components, which **Icon Process Controls Ltd** examination determines to its satisfaction to be defective in material or workmanship within the warranty period. **Icon Process Controls Ltd** must be notified pursuant to the instructions below of any claim under this warranty within thirty (30) days of any claimed lack of conformity of the product. Any product repaired under this warranty will be warranted only for the remainder of the original warranty period. Any product provided as a replacement under this warranty will be warranted for the one year from the date of replacement.

Returns

Products cannot be returned to **Icon Process Controls Ltd** without prior authorization. To return a product that is thought to be defective, go to www.iconprocon.com, and submit a customer return (MRA) request form and follow the instructions therein. All warranty and non-warranty product returns to **Icon Process Controls Ltd** must be shipped prepaid and insured. **Icon Process Controls Ltd** will not be responsible for any products lost or damaged in shipment.

Limitations

This warranty does not apply to products which: 1) are beyond the warranty period or are products for which the original purchaser does not follow the warranty procedures outlined above; 2) have been subjected to electrical, mechanical or chemical damage due to improper, accidental or negligent use; 3) have been modified or altered; 4) anyone other than service personnel authorized by **Icon Process Controls Ltd** have attempted to repair; 5) have been involved in accidents or natural disasters; or 6) are damaged during return shipment to **Icon Process Controls Ltd** reserves the right to unilaterally waive this warranty and dispose of any product returned to **Icon Process Controls Ltd** where: 1) there is evidence of a potentially hazardous material present with the product; or 2) the product has remained unclaimed at **Icon Process Controls Ltd** for more than 30 days after **Icon Process Controls Ltd** has dutifully requested disposition. This warranty contains the sole express warranty made by **Icon Process Controls Ltd** in connection with its products. **ALL IMPLIED WARRANTIES, INCLUDING WITHOUT LIMITATION, THE WARRANTIES OF MERCHANTABILITY AND FITNESS FOR A PARTICULAR PURPOSE, ARE EXPRESSLY DISCLAIMED**. The remedies of repair or replacement as stated above are the exclusive remedies for the breach of this warranty. **IN NO EVENT SHALL Icon Process Controls Ltd BE LIABLE FOR ANY INCIDENTAL OR CONSEQUENTIAL DAMAGES OF ANY KIND INCLUDING PERSONAL OR REAL PROPERTY OR FOR INJURY TO ANY PERSON. THIS WARRANTY CONSTITUTES THE FINAL, COMPLETE AND EXCLUSIVE STATEMENT OF WARRANTY TERMS AND NO PERSON IS AUTHORIZED TO MAKE ANY OTHER WARRANTIES OR REPRESENTATIONS ON BEHALF OF Icon Process Controls Ltd**. This warranty will be interpreted pursuant to the laws of the province of Ontario, Canada.

If any portion of this warranty is held to be invalid or unenforceable for any reason, such finding will not invalidate any other provision of this warranty.

For additional product documentation and technical support visit:

www.iconprocon.com | e-mail: sales@iconprocon.com or support@iconprocon.com | Ph: 905.469.9283

ICON™ PROCESS CONTROLS Corrosion-Free Instrumentation Equipment

 © Icon Process Controls Ltd.