FP 400

INSTALLATION INSTRUCTIONS

DIAPHRAGM PUMP



FP 400 DCB-4

Before operating the pump and the accessories, please read the Installation Instructions and pay attention to the safety precautions.

Contents **Page**

1 General information 4
1.1 Information about the instructions 4
1.2 Warnings 4
1.3 Disclaimer of liability 5
1.4 Manufacturer's address 5
1.5 Other applicable documents 5
2 Safety 6
2.1 Intended use 6
2.2 Reasonably foreseeable misuse 6
2.3 Responsibility of the user 6
2.4 Product-specific dangers 6
3 Installation 9
3.1 Installation location 9
3.2 Mechanical fixture 10
3.3 Connecting the fluid system 10
3.4 Electrical connection 10
4 Initial start-up 11
5 Accessories/options 12
5.1 Leak sensor (1) 12
5.2 Pressure switch (2) 12
6 Maintenance 13
6.1 Preparations for disassembly 13
6.2 Disassembling the pump head 14
6.3 Installing the pump head 15
7 Rectifying transfer problems 17
8 Returning the pump 18

1 General information

1.1 Information about the instructions

Contents

The Installation Instructions describe the requirements for correct and safe installation of the product in the complete machine.

Storage location

These Installation Instructions are part of the product. Information that relates to safety should be used for the documentation of the complete machine.

Project pumps

Customer-specific project pumps (pump models which begin with “PL” or “PML”) may differ from the Installation Instructions.

1.2 Warnings

Warnings in the Installation Instructions are identified with the danger symbol, keywords and colors. These provide an indication of the extent of the danger.



⚠ DANGER

Indicates a dangerous situation which will lead directly to death or serious injury if it is not avoided.



⚠ WARNING

Indicates a dangerous situation which may lead to death or serious injury if it is not avoided.



⚠ CAUTION

Indicates a dangerous situation which may lead to moderate or minor injuries if it is not avoided.

NOTICE

Indicates a situation which may cause damage to property if it is not avoided.

1.3 Disclaimer of liability

The manufacturer can accept no liability for any damage or malfunctions caused by failure to follow the Installation Instructions.

The manufacturer can accept no liability for any damage or malfunctions caused by modification or conversion of the device or improper handling.

The manufacturer can accept no liability for any damage or malfunctions caused by the use of non-approved spare parts and accessories.

1.4 Manufacturer's address

KNF Flodos AG
Wassermatte 2
6210 Sursee, Switzerland

Tel +41 (0)41 925 00 25
Fax +41 (0)41 925 00 35

www.knf.com

1.5 Other applicable documents

The documents listed must also be taken into consideration. The valid versions can be found at www.knf.com/downloads.

- Data sheet
- 3D model

The following should also be observed:

- Local T&Cs

  Sales documents and agreement between KNF and customer
- Drive specification

2 Safety

2.1 Intended use

This pump is intended exclusively for use as follows:

- To transfer liquids and gases
- For operation in accordance with the operating parameters specified in the technical data and other applicable documents

2.2 Reasonably foreseeable misuse

The pump may not:

- be operated in an explosive atmosphere;
- be used to transfer explosive media;
- be used to transfer media whose compatibility with the pump head, valves, diaphragms and seals has not been established.

2.3 Responsibility of the user

The user is responsible for ensuring compliance with the safety precautions in these Installation Instructions. Applicable safety, accident prevention and environmental protection regulations must be complied with.

2.4 Product-specific dangers

This chapter describes residual risks that have been identified in a risk assessment. Safety precautions and warnings in this chapter and in other chapters in the Installation Instructions must be observed in order to avoid dangerous situations.

⚠ DANGER

Danger of injuries and property damage caused by hazardous materials

Poisoning and caustic burns, or undesirable reactions caused by escaping hazardous materials



- ➢ Observe the safety data sheets for the media to be transferred.
- ➢ Before transferring a medium, check whether it can be transferred safely in a specific instance.
- ➢ Ensure that there will be no danger of explosion, even under extreme operating situations (temperature, pressure) and during operational disturbances.
- ➢ Ensure that the pump is used by appropriately trained personnel.
- ➢ Determine the resistance of the head materials.
- ➢ Check that the pump and system are leak-tight at the operating temperature of the medium to be transferred.
- ➢ Check the pump regularly for damage.
- ➢ Use the pump only if it is in perfect working order.
- ➢ Operate the pump in accordance with the technical data.
- ➢ Carry out work on the pump and liquid system only after decontamination and/or the presence of a decontamination declaration.



⚠ DANGER

Danger of injuries and property damage caused by leaks at interfaces to the pump head

Poisoning and caustic burns, or undesirable reactions caused by escaping hazardous materials

- Wear personal protective equipment.
- Connect the pump correctly.
- Use the pump only if it is in perfect working order.
- Operate the pump in accordance with the technical data.



⚠ DANGER

Danger of injuries and property damage caused by uncontrolled flows when the pump is not operating

Poisoning and caustic burns, or undesirable reactions caused by escaping hazardous materials

- Construct the fluid circuit so that the operating pressure on the pressure side of the pump is higher than on the suction side.
- Install a shut-off valve in the fluid circuit.

The risk analysis indicates a risk of explosion due to certain materials and substances.



⚠ DANGER

Danger of injuries and property damage caused by an explosion in the pump

The pump housing is made from aluminum. If the pump diaphragm is damaged, medium can accumulate in the housing and form hydrogen (especially with acids and lyes). This could cause an explosion in the pump housing.

- Check and monitor the reactivity of the medium with aluminum.
- No flammable materials in the direct vicinity of the pump or piping.
- Monitor leaks with the optional leak sensor integrated in the housing.

The pump housing is designed to withstand pressure surges caused by explosions. The probability of a fault that would cause an explosion is deemed to be low. When installed in the system, the risks in the complete system must be assessed.



⚠ DANGER

Danger of injuries and property damage caused by an explosion in the connection lines and in the pump

Evaporation of flammable liquids

- When flammable liquids are transferred, an explosive atmosphere can form in the pump and in the lines during filling and emptying.
- With the hoses that are used, pay attention that no electrostatic charges can form (use conductive materials, grounding and potential equalisation).
- The hoses that are used must be able to withstand the potential pressure of explosion.



⚠ DANGER

Danger of injuries and property damage caused by the pump exploding

If the pump has not been used or has been stored for some time, residual medium may evaporate and form an explosive atmosphere.

- If the pump has not been used for some time or is stored. Empty the pump and rinse with neutral medium to prevent a subsequent reaction.



⚠ WARNING

Danger of injuries and property damage caused by leaks to the environment

Flammable materials

- Keep flammable materials away from the direct vicinity of the pump and piping.



⚠ WARNING

Danger from failure of the diaphragms

Injuries or damage to equipment caused by escaping media when the pump diaphragms are damaged.

- Take precautions in the design of the final system so that any escaping liquids cannot cause a hazard.
- Detect faults with the leak sensor that is integrated in the housing on a project basis.
- Provide a drainage opening for the housing on a project basis.

3 Installation

⚠ WARNING

Danger as a result of incorrect installation

Injuries or damage to equipment caused by escaping media

- After installation, check the system for leaks using a harmless medium.
- Observe the requirements for correct use.
- Take precautions in the design of the final system so that any escaping liquids cannot come into contact with live components.
- Use only connections that are specified in the data sheet. Do not use NPT threads or sealing tape, as cracks can form at the plastic connections.

The following requirements apply to all the activities described in this section:

3.1 Installation location

The installation location must:

- protect the pump against immersion;
- keep away aggressive and flammable liquids and vapors;
- enable hose connections with no tensile or bending loads;
- take into account cooling of the pump drive;
- consider handling of any leaks;
- have appropriate precautions if flammable media are used.

Optimum filling/venting

The following guidance is recommended for optimum filling and venting of the pump head:

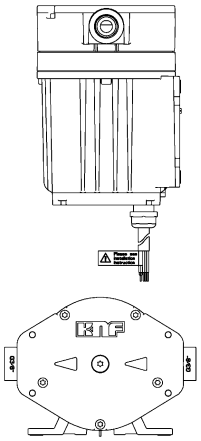

- Pump vertical with pump head facing up

- Horizontal with pressure connection on the left or right

Fig. 1:

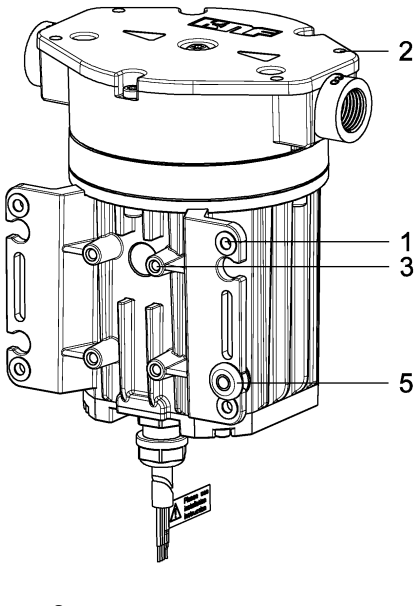

3.2 Mechanical fixture

Protect the product against shocks, impacts and strong vibrations.

The following fixture options are available:

- Through-holes for M4 bolts on motor base (**1**)
- Through-holes for M4 bolts on pump head (**2**)
- Drilled holes for self-tapping screws Ø4 (**3**)

The following fixtures are available as project pumps:

- M5 thread on motor base (**1**)
- Rubber grommets for vibration-optimized fixture (**5**)
- Fixing clamp

3.3 Connecting the fluid system

Use suitable means to check the fluid connection for leaks.

For more information about dimensions, refer to the data sheet.

3.4 Electrical connection

For performance specifications, refer to the data sheet.

Observe the regulatory requirements for electrical installations:

- Overload protection and separating protective devices
- Contact protection and additional insulation
- Ground connections
- Protection against vibration, tensile loading and corrosion

Terminal assignment

Lead	Signal	Description
red	+VS	+ Supply voltage
black	- VS /GND	- Supply voltage
white	Vctrl	Control voltage 0…5V
green	FG	Speed output
blue	PMW inverse	Control signal PWM inverse. If this control signal is to be used, the connection to +VS must be separated and Vctrl must be connected with -VS/GND.

For detailed information about control, please refer to the drive specification (available from your local KNF dealer).

4 Initial start-up

The product may not be put into service until it has been determined that the machine in which the product is to be installed complies with the provisions of the Machinery Directive 2006/42/EC.

⚠ WARNING

Danger of rupture of the fluid system as a consequence of overpressure



The pump builds up pressure. In a closed system, it is possible that the maximum permitted operating pressure is exceeded. This can cause injuries or damage to the pump and system.

- ➢ Prevent operation against a closed system.
- ➢ In the case of parts that are in contact with the fluid, use only those that are designed for the pump's operating pressure as a minimum.
- ➢ If necessary, take suitable measures to limit the maximum system pressure.

⚠ CAUTION

Danger of unexpected chemical reactions with water



Water residues left in the pump from testing in the factory may react with the transferred medium.

- ➢ Before putting the pump into service, flush it with a medium that is not critical with regard to water.

⚠ CAUTION

Danger of hot surfaces



The pump becomes hot during operation. Burns may be caused by hot surfaces or injuries may occur as a result of uncontrolled movements.

- ➢ Do not touch the pump while it is operating.
- ➢ Ensure sufficient cool air and keep an appropriate distance to adjacent components.
- ➢ Operate the pump in accordance with the technical data.
- ➢ At medium temperatures above 50°C, take safety precautions against burns on fluid components.

Before switching on the pump, check the following:

- All hoses attached properly
- Pump is mechanically fixed
- Specifications of the power supply correspond with the data on the pump’s rating plate
- Pump outlet not blocked
- All cables properly connected
- Contact protection for electrical connections and moving parts installed

5 Accessories/options

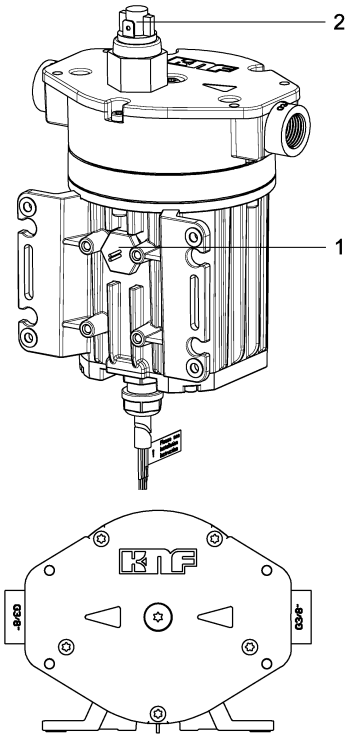

Fig. 3:

5.1 Leak sensor (1)

ID 174542

- The integrated leak sensor offers protection against escaping medium if the diaphragm ruptures.
- In case of a fault, the pump housing is sealed to the outside; however, the housing seals are not resistant to aggressive media.
- The sensor outputs a signal if the housing fills with medium. In such a case, the pump must be switched off within 5 minutes and the system pressure must be relieved to prevent medium escaping.
- To ensure that the leak sensor functions correctly, install the pump vertically or horizontally as shown in Fig. 3.

5.2 Pressure switch (2)

Inadmissible excess pressure can be detected with the pressure switch.

- Design INOX / FKM ID 177056
- Design zinc-coated steel / EPDM ID 177798

The pressure switch is integrated in the pump head and has an N/C and an N/O contact.

The switching threshold can be set between 0 and 1 bar.

The data sheets are available at www.knf.com.

6 Maintenance



⚠ WARNING

Health hazard due to dangerous substances in the pump

Depending on the medium transferred, caustic burns or poisoning are possible.

- ➢ Wear protective clothing if necessary, e.g. protective gloves.
- ➢ Flush the pump with a neutralizing liquid, and then pump empty.

Qty	Tools
1	Torque wrench
1	Socket wrench insert (bit) Torx T20
1	Socket wrench insert (bit) Allen head size 3

6.1 Preparations for disassembly

1. Flush the pump with a suitable neutralizing liquid, and make sure that no dangerous substances are left in the pump.
2. Empty the pump.
3. Separate the electrical connections.
4. Disconnect hoses from pump head.

6.2 Disassembling the pump head

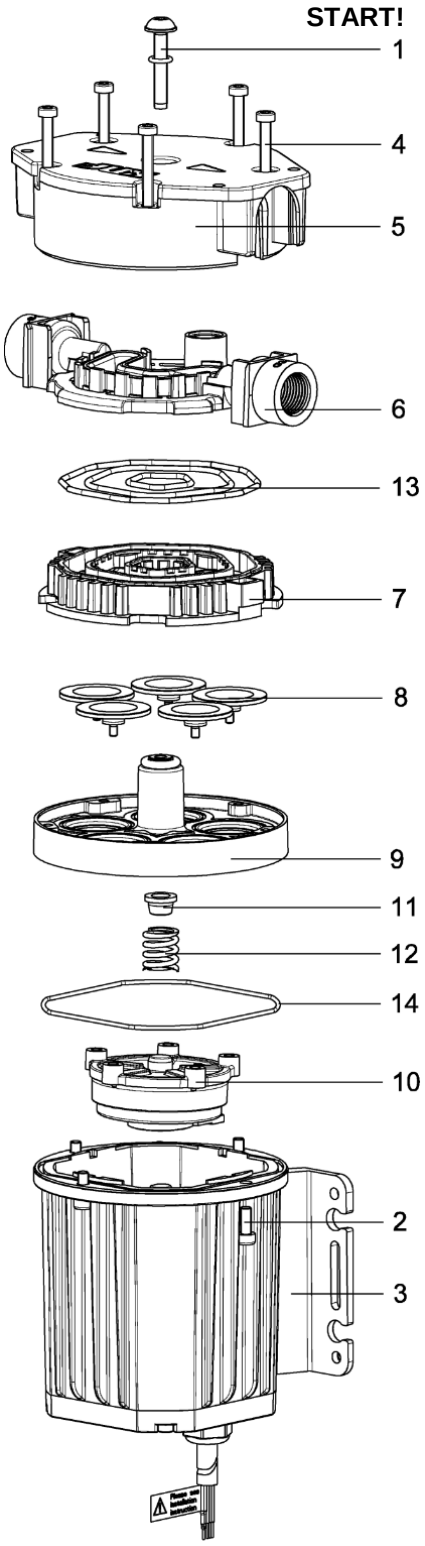

1. **First step:** Undo center screw (**1**).
2. Undo the four motor fastening screws (**2**).
3. Separate the pump head from the motor (**3**).
4. Undo head screws (**4**).
5. Remove the cover plate (**5**), connecting plate (**6**) and intermediate plate (**7**).
6. Loosen the diaphragms (**8**) by hand if they are to be replaced.
7. Put the diaphragm receiver (**9**) and diaphragm holder (**10**) aside together. Spring cap (**11**) and spring (**12**) are between them.
8. Clean the intermediate plate (**7**) with integrated valves well, removing all residues. Blow out with compressed air (max. 1.5 bar) and allow to dry.

Key

1	Center screw
2	Motor fastening screws
3	Motor
4	Head screws
5	Cover plate
6	Connecting plate
7	Intermediate plate
8	Diaphragms
9	Diaphragm receiver
10	Diaphragm holder
11	Spring cap
12	Spring
13	O-rings
14	Motor seal

Fig. 4:

6.3 Installing the pump head

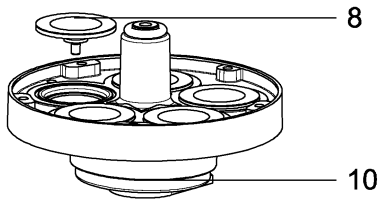

Fig. 5:

1. Screw diaphragms (**8**) by hand into the diaphragm holder (**10**) and tighten.

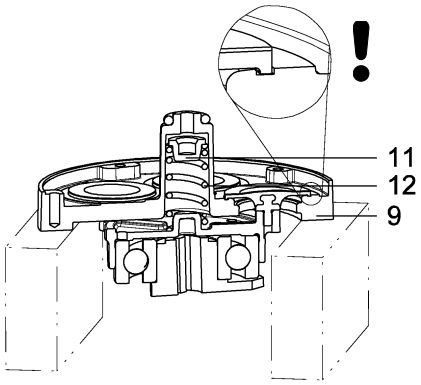

Fig. 6:

2. As shown in Fig. 6, place diaphragm receiver (**9**) on a suitable surface.

   Make sure that the diaphragm holder (**10**) hangs on the diaphragms only (**8**) and that the diaphragms (**8**) sit properly in the grooves of the diaphragm receiver (**9**).

3. Make sure that the spring cap (**11**) and spring (**12**) are inserted.

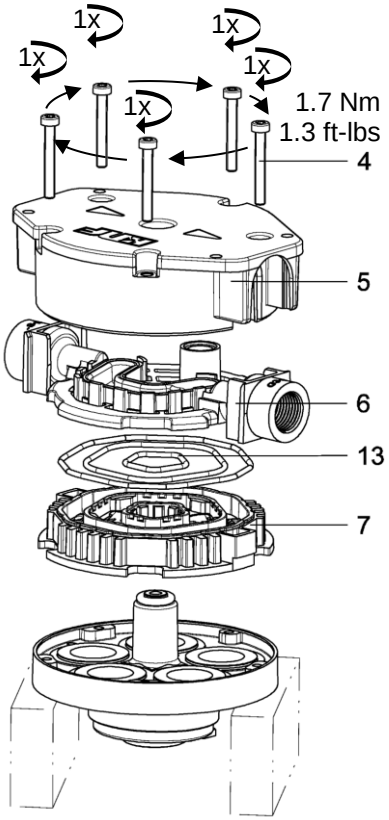

Fig. 7:

4. Position the intermediate plate (**7**) on the diaphragm receiver (**9**). Make sure that the five tappets and pockets are aligned correctly.
5. Replace the three O-rings (**13**) in the connecting plate (**6**) to achieve an optimum seal.
6. Place the connecting plate (**6**) on the intermediate plate (**7**).
7. Guide the cover plate (**5**) over the connecting plate (**6**).
8. Place the head screws (**4**) in the cover plate (**5**) and tighten only slightly at this time.
9. Alternate tightening each head screw (**4**), only one rotation at a time, until all the screws are tightened with a torque of 1.7 Nm. This procedure is important to ensure that the diaphragms are compressed equally.

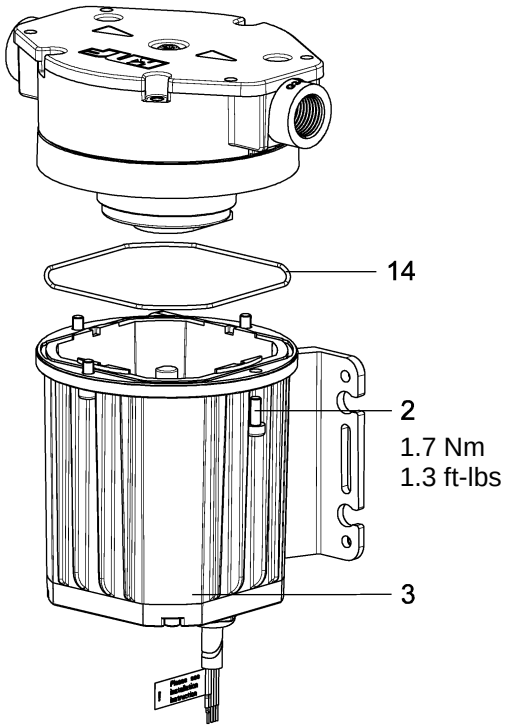

Fig. 8:

10. Place the pump head on the motor (**3**). Make sure that the motor sealing ring (**14**) is positioned correctly.
11. Tighten the motor fastening screws (**2**) to 1.7 Nm.

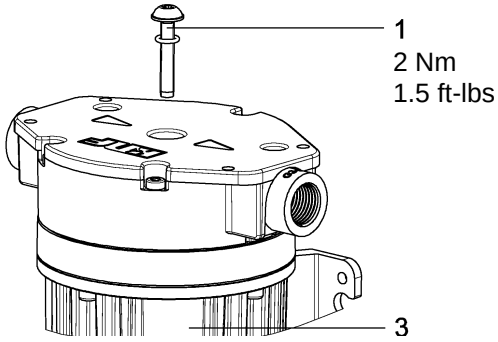

Fig. 9:

12. **Final step:** Tighten the center screw (**1**) to 2 Nm.



⚠ WARNING

Escaping medium

After assembly, the pump may not be leak-tight due to incorrect assembly, damaged or soiled seal faces, or other reasons.

- ➢ Run the pump for several minutes with a harmless medium at maximum operating pressure.
- ➢ Check that pump is leak-tight.

7 Rectifying transfer problems

Symptom	Cause	Remedy
Pump does not work, no movement, or noise can be heard.	No or incorrect control	Check that voltage and signal shape comply with the specification.
Pump does not work; drive becomes very hot.	Motor is controlled with the wrong signal.	Check that voltage and signal shape comply with the specification.
Pump does not suck or vacuum is not sufficient.	External valve is closed.	Check external valves.
	Counter-pressure on pressure side too high	Change pressure conditions on pressure side.
	Particles in the pump head	Rinse pump head. Use preventive pre-filters. Dismantle and clean pump head.
Pump does not transfer.	External valve is closed, or filter is blocked or too small.	Check external valves and filters.
	Connections or hoses are blocked.	Check connections and hoses. Remove blockage.
Flow rate is insufficient or unstable.	Incorrect control	Check that voltage and signal shape comply with the specification.
	Cross-section of hydraulic hoses or connectors too narrow or restricted	Disconnect the pump from the system and determine output values. Remove restriction (e.g. valve), if necessary. If applicable, use larger-diameter hoses or connectors.
	Counter-pressure in the system higher than assumed for the design	Contact KNF dealer.
	Particles in the pump head	Rinse pump head. Use preventive pre-filters. Dismantle and clean pump head. Install new intermediate plate (spare part).
	Pump has reached the end of its service life.	Replace pump.
	Diaphragm defective	Replace pump.

If the fault cannot be rectified, please contact your local KNF dealer (www.knf.com).

8 Returning the pump

1. Rinse the pump to remove dangerous or aggressive liquids from the pump head.
2. Dismantle the pump.
3. Send the pump with completed decontamination declaration (see www.knf.com/download) to KNF.