# D500 | D520 Series
## pH/ORP Digital Analyzer Controller

Industrial Analytical Equipment

ProCon®




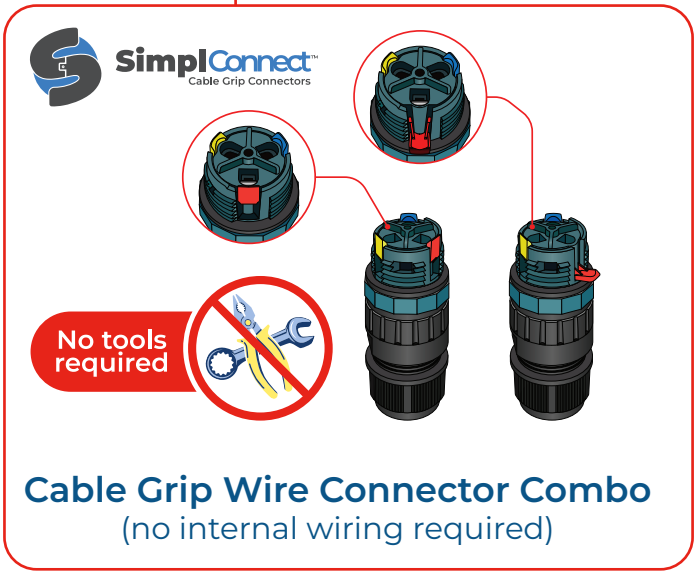


**Cable Grip Wire Connector Combo**
(no internal wiring required)

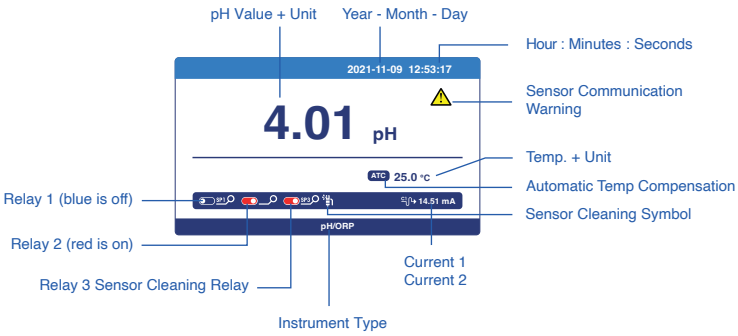


- Large color LCD display
- Intelligent menu operation
- Data recording / curve display
- Multiple automatic SimplCal® calibration
- Manual and automatic temperature compensation
- Three (3) relays
- 4-20mA & RS485 multiple output modes
- Multi-parameter display — simultaneously shows pH, ORP and temperature
- Password protection

### High Performance Industrial Controller

The ProCon® D500/D520 series is an extremely robust industrial pH/ORP controller.

The modular design is both easy to install and operate providing first measurement values in under one minute.

The D500/D520 is packed with all the extra features included, no need to pay extra for relay, 4-20mA or RS485 outputs.

The SimplCal® feature makes calibrating your sensor easier and quicker than ever before.

The cost-saving quick and simple setup is done through our user-friendly step-by step on-screen menu.

Active display of red alarm LED provides notification of out-of-bounds sensor readings and indication for sensor cleaning/recalibration or replacement.

## Enclosure

The D500/D520 is packaged in a rugged polycarbonate enclosure making it ideally suited for heavy-duty applications. A mounting kit is included for surface and panel mounting. Pipe mounting kits are available.

## Display Descriptions

All electrical connections should be checked before use. After the power is switched on, the meter will display as follows.

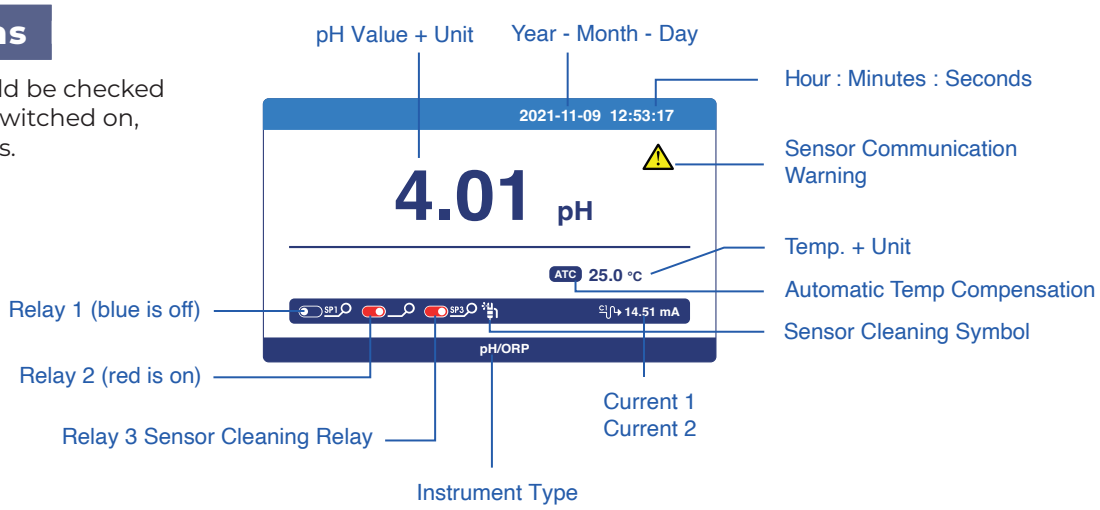


### Measurement Mode

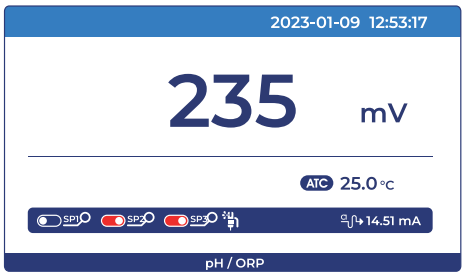


### Programming Menu

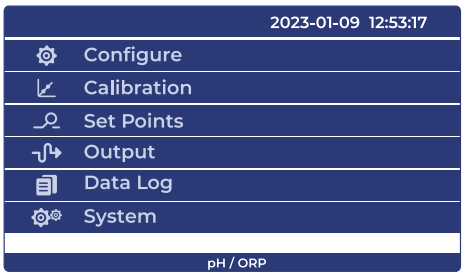


### Calibration Mode




### Trend Chart Data Logging Display

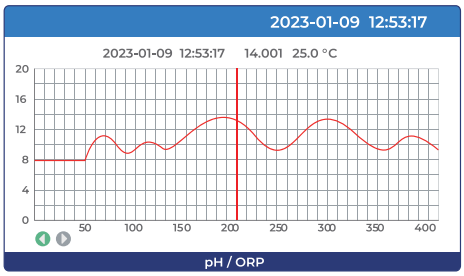


## SimplCal® Calibration




PH Calibration




ORP Calibration

## Technical Specifications

| | |
|---|---|
| Measuring Range | pH: -2 – 16pH \| ORP: -2000 – +2000mV |
| Unit | pH \| mV |
| Resolution | pH: 0.001pH \| ORP: 1mV |
| Basic Error | pH: 0.001pH \| ORP: 1mV |
| Temperature Range | 14 – 302°F \| -10 – 150°C (Sensor Selection Dependant) |
| Temperature Resolution | 0.18°F \| 0.1°C |
| Temperature Accuracy | ±0.54°F \| ±0.3°C |
| Temperature Compensation | Manual or Automatic |
| Stability | pH: 0.01pH/24h \| ORP: 1mV/24h |
| Outputs | Two (2) 4–20mA \| 20–4mA \| 0–20mA |
| Communication | RS485 MODBUS RTU |
| Relay Control Contact | 5A 240VAC \| 5A – 28VDC |
| Power Supply | 9 – 36VDC (std) \| 85 – 265VAC \| Power Consumption 3W |
| Working Temperature | 14 – 140°F \| -10 – 60°C |
| Relative Humidity | ≤ 90% |
| Enclosure Rating | IP65 |
| Weight | 0.7kg |
| Dimensions | 144 × 144 × 118mm |
| Installation Opening Size | 138 × 138mm |
| Installation methods | Panel \| Pipe \| Wall |
| Other functions | Data record & Curve display |



## Keypad Descriptions

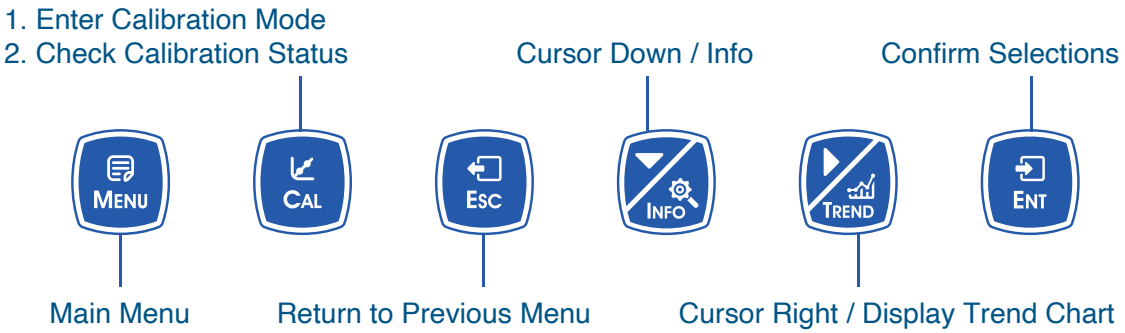


## Dimensions

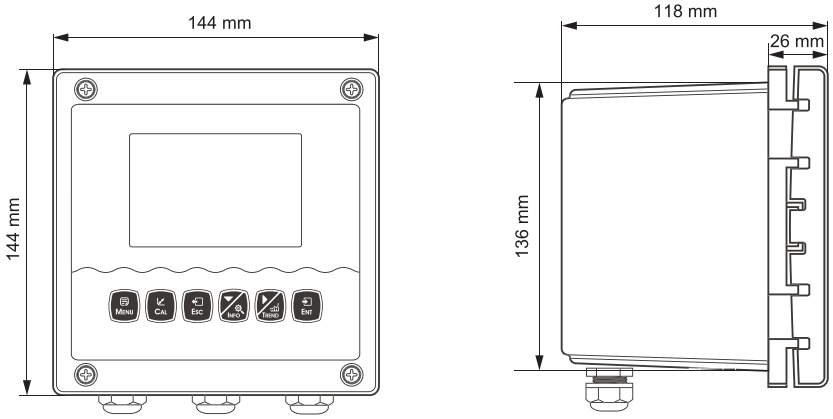


## Instrument Installation

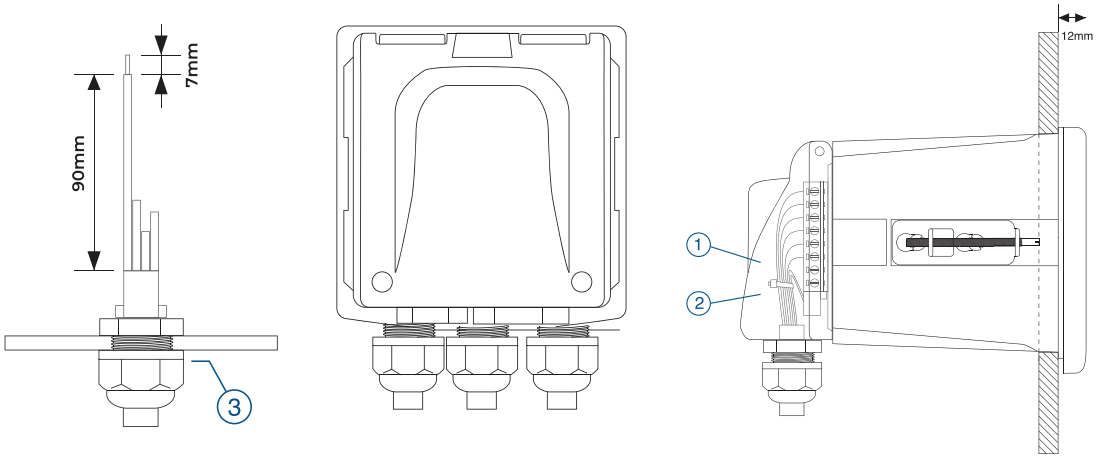


1. Cable (Recommended stripping length for cables is at least 90mm)
2. Cable ties
3. Waterproof cable glands

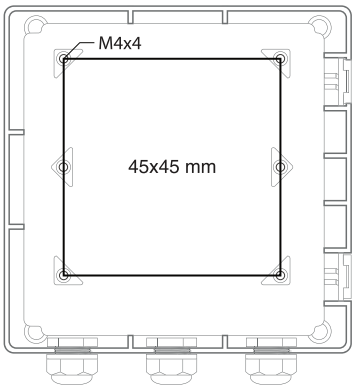


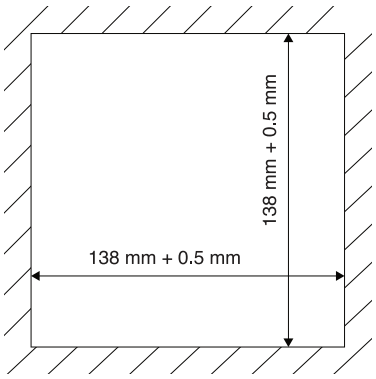


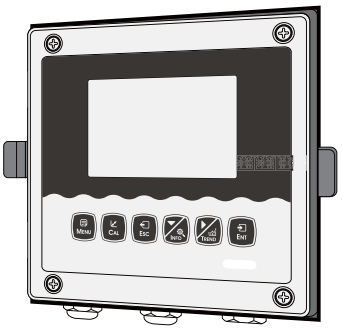



Install fixing bracket for instrument
Insert into the cut-out hole

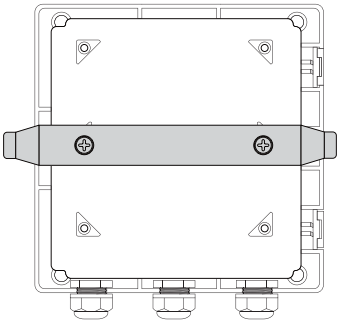

## Slim Line Wall Mount Bracket

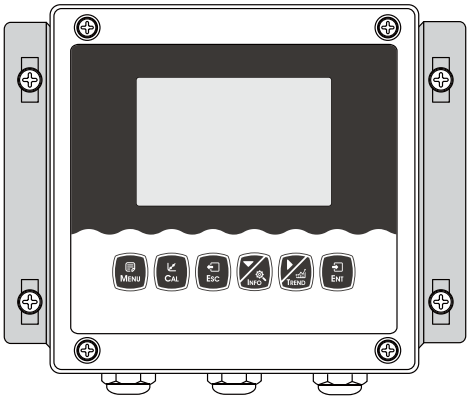

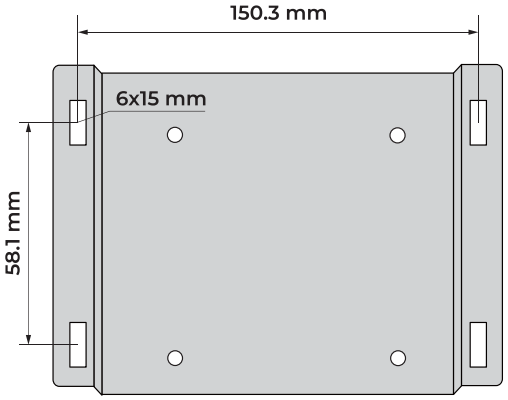


### Installation Full Bracket



Install fixed bracket top view

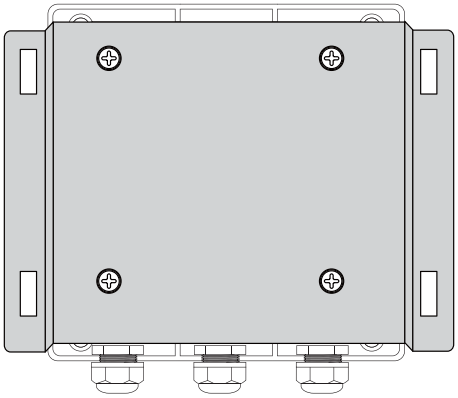

## Typical Application

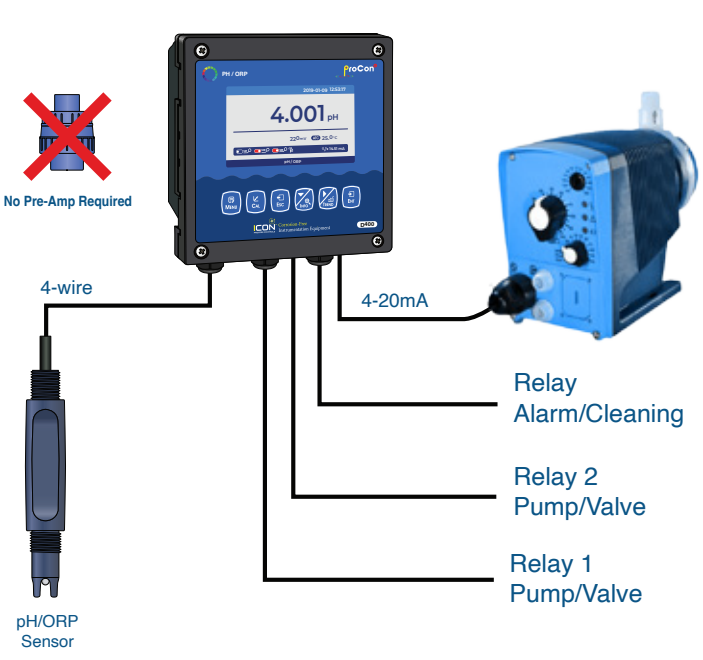


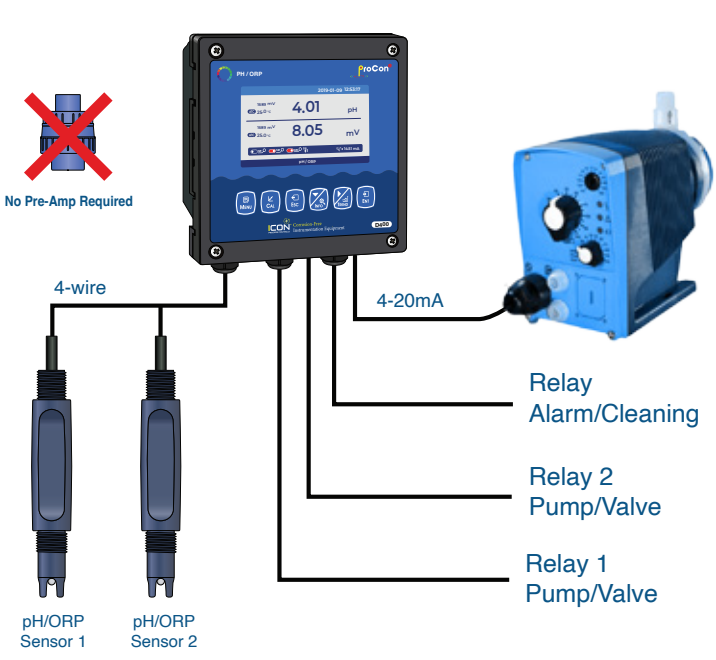


## Model Selection

**D500** - [4] - [C] - [Y] - **P** - **0** (Single Display)

| Power | Output | Power Cord | Sensor Type |
|---|---|---|---|
| **4:** 24VDC (std)<br>**2:** 120VAC | **B:** 3 Relays<br>**D:** 4-20mA + 3 Relays | **Y:** Yes<br>**N:** No | **P:** pH/ORP |

**D520** - [4] - [D] - [Y] - **P** - [C] (Dual Display)

| Power | Output | Power Cord | Sensor Type #1 | Sensor Type #2 |
|---|---|---|---|---|
| **4:** 24VDC (std)<br>**2:** 120VAC | **B:** 3 Relays<br>**D:** 4-20mA + 3 Relays | **Y:** Yes<br>**N:** No | **P:** pH/ORP | **C:** Conductivity<br>**P:** pH/ORP |