truflo®

BRP Series Back Pressure / Relief Valve

INSTRUCTION MANUAL



Please read this Instruction Manual carefully and thoroughly for the correct and optimum use of this product.
Kindly keep this manual in a convenient place for quick reference.

Operating company

Responsibilities:

- Keep this manual available at the place of operation, also for future use.
- Ensure that employees read and observe this manual and other applicable documents, especially the safety instructions and warnings.
- Observe any additional country-specific rules and regulations that relate to the system.

Qualified Personnel

Mechanics Qualification:

- Ensure Only Qualified employees with additional training for installation of these products.

Electrical Qualification:

- Qualified electrician

Responsibility:

- Read, observe and follow this manual and the other applicable documents, especially all safety instructions and warnings.

General safety instructions

The manufacturer accepts no liability for damages caused by disregarding any of the documentation.

Intended Use

- Ensure the Pressure-Relief/Back Pressure valve material is suitable for the process media. Please check chemical resistance
- Adhere to the operating limits (Pressure and temperature limits,
- Observe the Process Setting Range
- The BPV Series is not suitable for media that contains solids

General Safety Instructions

The manufacturer accepts no liability for damages caused by disregarding any of the documentation.

Safety Conscious Operation

- Only operate the fitting if it is in perfect technical condition and only use it as intended, ensuring that workers are aware of safety and risks, and in adherence to the instructions in this manual.
- Ensure that the following safety aspects are observed and monitored:
- Statutory or other safety and accident-prevention regulations

Obligations of Personnel

- Observe the instructions on the valve and keep them legible, e.g. nameplate, identification marking for fluid connections.
- Only carry out work on the fitting if the following requirements are met:
  - System is empty
  - System has been flushed
  - System is depressurized
  - System has cooled down
  - System is secured against being switched back on again

Specific hazards

Hazardous media

- When handling hazardous media (e.g. hot, flammable, explosive, toxic, hazardous to health or the environment), observe the safety regulations for the handling of hazardous substances.
- Use personal protective equipment when carrying out any work on the valve.
- Collect leaking pumped liquid and residues in a safe manner and dispose of in accordance with environmental regulations.

Operation

Pressure Setting

Presetting from factory is available:
Set the pressure relief valve under the same conditions encountered later during operation!
Recommendation for the setting: Installation of a diaphragm guard before the pressure relief valve.

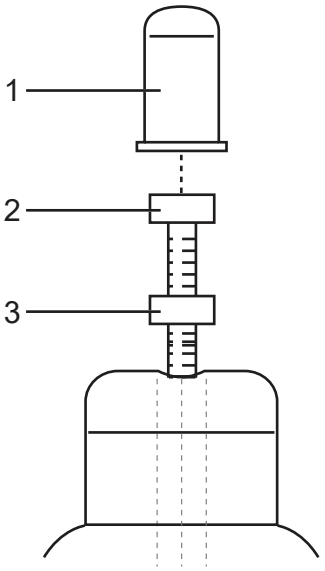

Set pressure (schematic representation)

1 Protection cap
2 Adjustment screw
3 Counter nut

1. If present, remove protection cap (1) at adjustment screw (2) from the valve.
2. Undo locknut (3).
3. Turn adjustment screw (2) counter-clockwise until the tension on the spring. Valve is open.

4. Start up system.
5. Turn adjustment screw (2) clockwise until desired system pressure is reached.
6. Fix the adjustment screw (2) using a ring wrench, then tighten the locknut (3).

Adjustment screw can be sealed to prevent unauthorized adjustment, if necessary.

7. Plug on protection cap (1), if present.

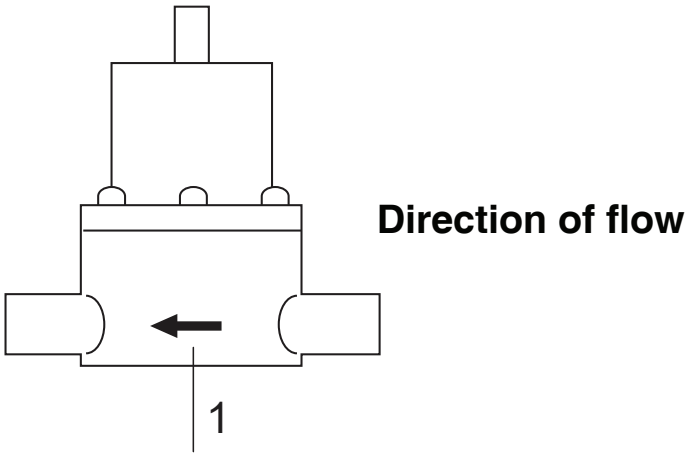

Valve with directional arrow

Commissioning

Risk of injury and poisoning due to hazardous or hot media.

- Use personal protective equipment when carrying out any work on the valve.
- Safely collect the media and dispose of it in accordance with environmental regulations.

Risk of injury during disassembly!

- Wear protective gloves, components can be very sharpedged due to wear or damage.
- Remove components with springs (e.g. pneumatic drive) carefully, since spring tension can cause components to be ejected.

Removing Valve

1. Ensure that:

- System is empty
- System has been flushed
- System is depressurized
- System has cooled down
- System is secured against being switched back on again

2. Remove Valve from the pipe.

3. Decontaminate the Valve if required.

- Dead space in the valve may still contain medium.
- Safety regulations governing the handling of hazardous substances
- Applicable standards and guidelines in the country where the pump is operated

Make personal protective equipment available.

Installation

Preparing for installation

Check operating conditions



Risk of poisoning and environmental damage from medium.

Leaks due to impermissible pipework forces.

- Ensure that the valve is not subject to any pulling or thrusting forces or bending moments.

1. Proper Installation of Valve within Piping System

- No pulling or thrusting forces
- No bending moments
- Adjust for changes in length due to temperature changes (compensators, expansion shanks)
- Optional installation position

2. Dimensions (⟶ Data sheet).

Troubleshooting



Risk of injury and poisoning due to hazardous or hot media.

- Use personal protective equipment when carrying out any work on the fitting.
- Safely collect the media and dispose of it in accordance with environmental regulations.

Error	Possible Cause	Corrective Action
Fitting leaky at diaphragm	Insufficient contact pressure (diaphragm fastening)	Retighten screws
Pressure falls below the permissible value	Diaphragms leaky	Replace diaphragm
Pressure rises above permissible value	Fitting installed in backwards	Install fitting in correction direction (⟶ Direction of flow).
Medium leaks out at adjustment screw	Diaphragms defective	Replace diaphragms

- Make sure all personnel tasked with work on the fitting have read and understood this manual and all other applicable documents, especially the safety, maintenance and repair information, before they start any work.
- Organize responsibilities, areas of competence and the supervision of personnel.
- The following work should be carried out by specialist technicians only:
  - *Installation, repair and maintenance work*
  - *Work on the electrical system*
- Make sure that trainee personnel only work on the fitting under supervision of specialist technicians.

Installation

Risk of poisoning and environmental damage from medium.

WARNING!

Leak due to faulty installation.

- Installation work on the pipes should only be performed by technicians who have been specially trained for the pipework in question.

Typical Dosing System Schematic

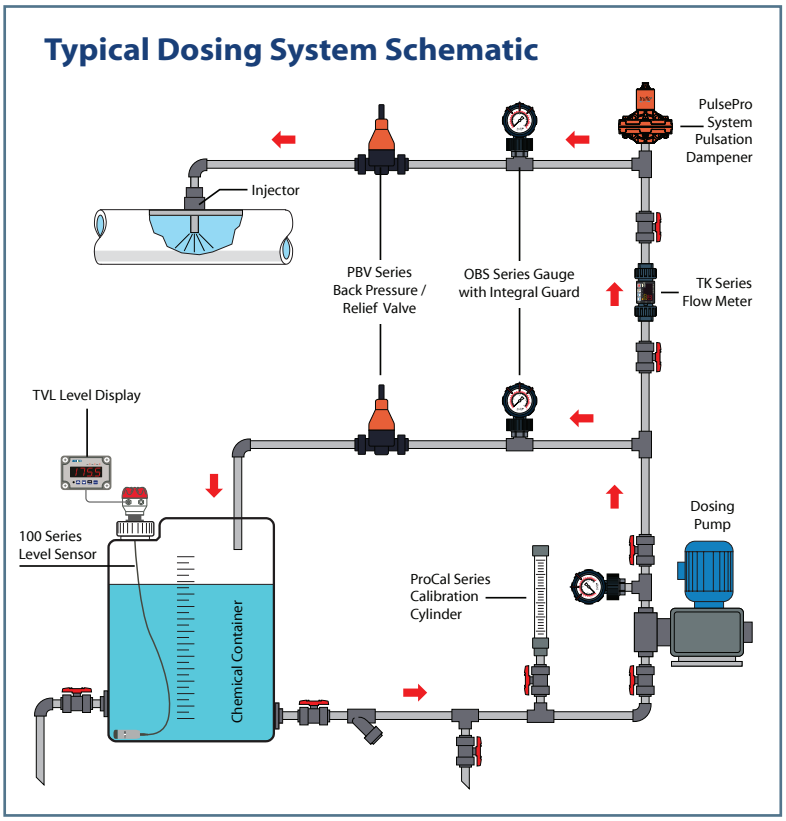

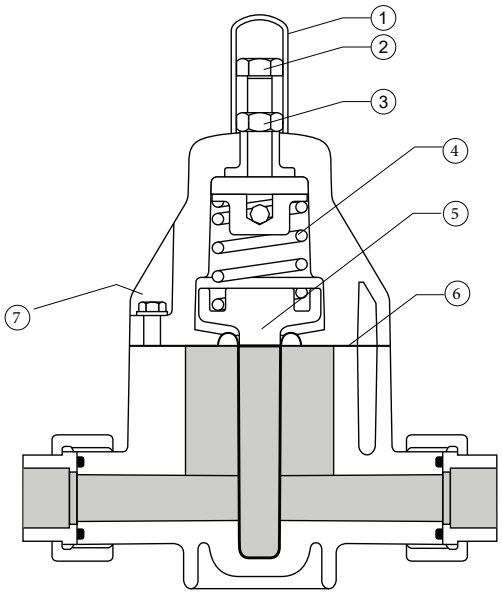

PARTS

No.	Part	Pcs.	Materials
1	Body	1	PVC | CPVC | PP | PVDF
2	Bonnet	1	PPG
3	Adjustment Screw	1	Galvanized Steel
4	Coil Spring	1	Galvanized Steel
5	Piston Plunger	1	PPG
6	Control Diaphragm	1	PTFE bonded EPDM
7	Bonnet Bolts	1	304 SS

DIMENSIONS

Model	Size	L	H	D	d	z	h
BRP005	½"	175	181	82	20	22	27
BRP075	¾"	174	181	82	25	19	29
BRP100	1"	202	198	107	32	21	33
BRP125	1 ¼"	251	198	107	40	31	35
BRP150	1 ½"	285	260	155	50	31	60
BRP200	2"	355	260	155	63	39	60

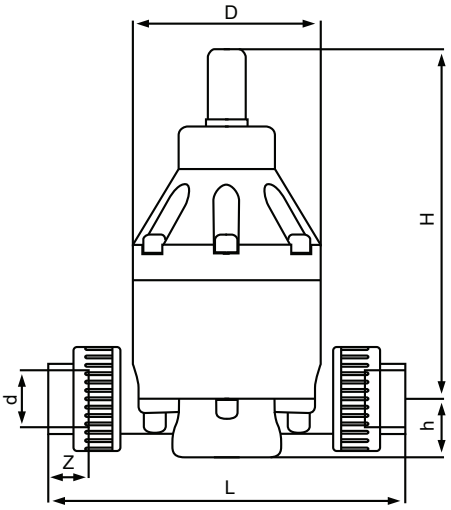

MAXIMUM PRESSURES PSI

Size	PVC				PP						PVDF					
	20°C 68°F	30°C 86°F	40°C 104°F	50°C 122°F	20°C 68°F	30°C 86°F	40°C 104°F	50°C 122°F	60°C 140°F	70°C 158°F	30°C 86°F	50°C 122°F	70°C 158°F	80°C 176°F	90°C 194°F	100°C 212°F
½" - 2"	150	90	44	15	150	116	90	60	37.5	15	150	90	55	40	30	15

**Note CPVC Pressure/Temp same as PP*

CV Values

½" (3.9)	¾" (6.6)	1" (9.4)	1¼" (18.4)	1½" (20.2)	2" (28)

ORDERING EXAMPLE

Back Pressure / Relief Valves	BRP	A	005	V	U
Body Material	**A** – PVC	**C** – CPVC	**P** – PP	**F** – PVDF	
Size	**005** – ½" **010** – 1" **020** – 2"	**012** – 1-¼"	**007** – ¾" **015** – 1-½"		
Elastomers	**E** – EPDM	**V** – FPM (Viton®)			
Ends	**S** – Socket	**T** – Threaded	**F** – Flanged **B** – Spigot (Butt)	**F** – Flanged **B** – Spigot (Butt)	**U** – Union Socket