FES SERIES

Plastic Flow Switch

Operating Manual

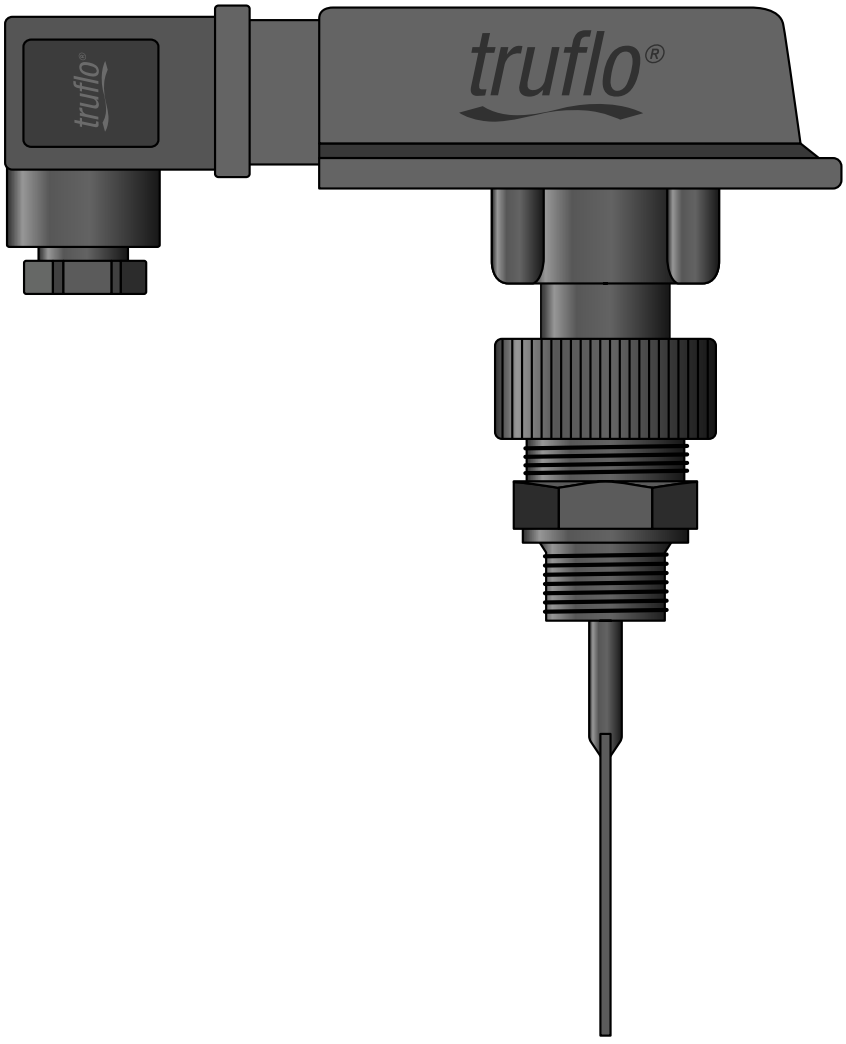

ICON™ PROCESS CONTROLS

Corrosion-Free
Instrumentation Equipment

www.iconprocon.com | sales@iconprocon.com | 905.469.9283

Table of Contents

Safety Information 03
Technological Progress 04
Functional Principle 04
Pump Protection 04
Technical Specifications 05
Installation 05
Electrical Connection 06
Dimensions 08
Warranty, Returns and Limitations 09

ICON™ PROCESS CONTROLS

Corrosion-Free
Instrumentation Equipment

Safety Information

Please always observe the following safety instructions!
Please pay attention to the safety instructions with the following pictograms and signal words in these operating instructions:

Warning | Caution | Danger
indicates general hazardous situations or cases which, if not avoided, could result in serious injury or death.

IMPORTANT!
indicates situations or cases which, if not avoided, could result in damage or failure of the **UltraFlo®** equipment.

Notice : Is used to lead users to helpful information not related to personal injury.

Safety Instructions

- Always read these operating instructions carefully prior to installing the new product. Always adhere to the instructions contained herein, especially the safety instructions, otherwise there is a potential risk of personal injury and damage to instruments and plants.
- Even though we provides assistance through personal consultation or the respective literature, it is the responsibility of the customers to determine the suitability of the product for the specific application.
- The flow switches are state-of-the-art devices. This concerns switching point accuracy, functioning and safe operation of the device.
- However, professional and safety conscious conduct of the operator is required to ensure safe operation.

Qualified Personnel

- The personnel entrusted with installing, operating and maintaining the flow switches have to be suitably qualified; the required knowledge can be gained via training courses or appropriate on-the-job instruction. The personnel have to be familiar with the contents of these instructions, which have to be available to them at all times.
- The electrical connection should only be carried out by a fully qualified electrician.
- All work has to be carried out in accordance with existing national regulations on accident prevention and safety at work and with any internal regulations of the operator, even if they are not specified in these instructions.

Special Safety Instructions

- The operational safety of the supplied equipment is only guaranteed if it is operated according to its intended use. The specified limit values (see the chapter entitled “Technical data“) should never be exceeded.
- To avoid damages to the flow switch and the monitored system, only use flow switches for minimum or maximum monitoring of the flow of liquids.
- Always follow and adhere to the flow switch installation instructions.
- Never operate the flow switch in systems which have a greater flow rate than the specified max. flow rate (see the chapter entitled “Technical data”, details of the max. flow rate). Otherwise it will cause irreparable damage to the flow switch.
- Prior to flow switch installation, ensure that all the materials of the flow switch are chemically and mechanically-resistant to the medium which is to be monitored and to all external factors.
- Ensure that the medium is free from magnetic particles.
- Suitable measures should be taken to prevent the medium from freezing. If the flow switch is to be used in ambient temperatures of < 39.2 °F, do not carry out any operation beforehand with pure water, e.g. a test run. Residual water in the flow switch can result in frost damage.
- No greases, oils etc. should be used during the installation of the **FES Series** devices due to the material resistance.
- Ensure that the max. specified operating pressure is not exceeded.
- Never remove a flow switch or its upper parts from a pipe system under pressure.

- If the medium which is to be monitored is very hot, the flow switches or their connection fittings will also become very hot. In this case, neither touch the flow switch nor place any heat-sensitive objects in its vicinity.
- Protect the flow switch against external magnetic fields in the immediate vicinity, since these can impair device functioning.
- The technical data of special versions (customised versions) can deviate from the details in these instructions. Please observe the details on the type plate.
- **Caution:** Danger of death due to high voltages! Always de-energize the system before connecting the connector cable.
- It is prohibited to remove or make type plates or any other information attached to the equipment indecipherable, otherwise all warranties and the responsibility of the manufacturer no longer apply.

Ensure that the maximum electrical contact load specified on the type plate is never exceeded; otherwise the reed contact integrated in the switching unit will be damaged.
The switching capacity is reduced with inductive loads. Details of the protective circuit can be requested from the manufacturer.

Technological Progress

The manufacturer reserves the right to revise, alter, or modify the flow meter to the most current technology without special prior notice. Further information about the latest updates and potential additions to these operating instructions are available from www.iconprocon.com

Functional Principle

The flow switch consists of a paddle system (1) which has a permanent magnet (2) located at its upper end. A reed contact (3) is positioned outside the flow above this magnet. A second, magnet (4) with opposite polarity is used to create a reset force.

The paddle system is moved once it comes into contact with the flow which is to be monitored. The magnet (2) changes its position in relation to the reed contact (3).

The contact opens/closes depending on the contact type. As soon as the flow is interrupted, the paddle returns to its original position and the reed contact opens/closes depending on the contact type.

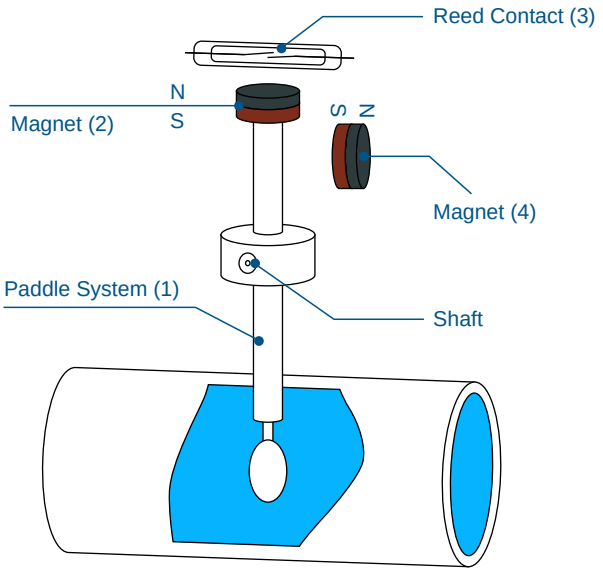

Pump Protection

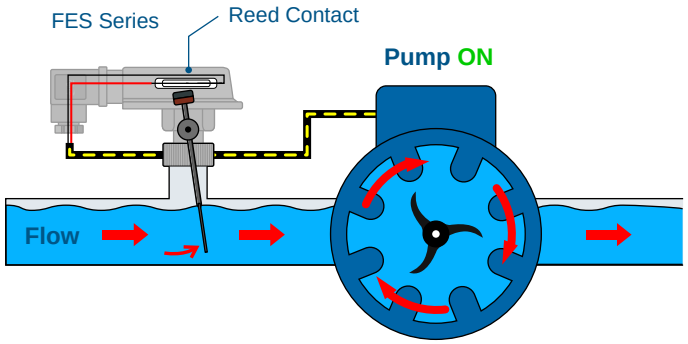

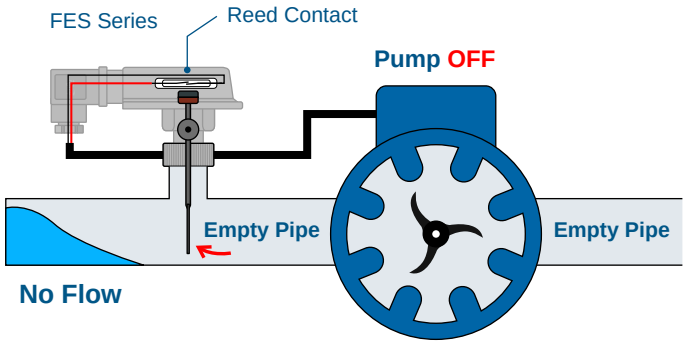

Technical Specifications

General	
Body	PP
O-Ring	Viton
Max. Working Temperature	190°F | 88°C
Max. Working Pressure | Non-Shock	145 psi | 10 bar
Relay	SPST Reed Switch | NO | NC | Adjustable
Protection Class	IP 65 | NEMA 4X
Max. Contact Current	1.5A
Max. Power Supply	85 VDC | 250 VAC

Installation

General Installation Instructions

- When choosing the installation site, ensure that the specified limit values (see "Technical Specifications") are not exceeded.
- Select suitable measures to prevent the medium from freezing.
  If the flow switch is to be used in ambient temperatures of < 39.2 °F, do not carry out any operation beforehand with pure water, e.g. a test run. Residual water in the flow switch can result in frost damage.
- Firstly, clean the pipe system in which the flow switch is to be installed and remove any magnetic particles, e.g. welding residue.
- The straight in- and outlet pipe (in front of and behind the flow switch) has to be at least 5 x ID.
- The nominal installation position of the flow switch is an "upright standing position" in horizontal pipework.
- The switches should only be installed in a vertical position, deviation max. 45 (Fig. 1).
- Please contact the manufacturer if other installation positions are desired.
- Please make sure that there are no external magnetic fields in the immediate vicinity of the flow switch, since these can impair device functioning (Fig. 2).
- There is an arrow on the flow switch. Ensure that this arrow is parallel with the pipe shaft and is facing in the direction of flow during installation (Fig. 2).
- The brass and Plastic union nuts ¾" BSP have a tightening torque of 18.439 ... 22.127 ft lb.
- The plastic union nuts have a tightening torque of 5.163 ... 5.901 ft lb.

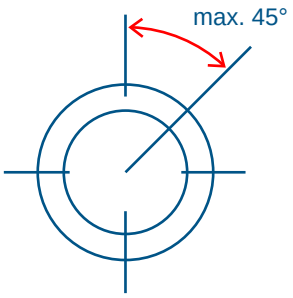

Fig. 1

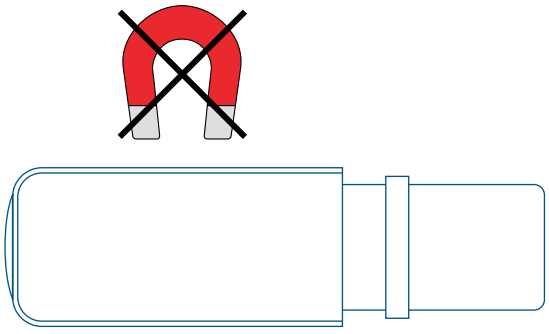

Fig. 2

- During flow switch installation, ensure that the paddle does not touch the wall of the pipe.
- Carry out installation of your device type as described in the table below.

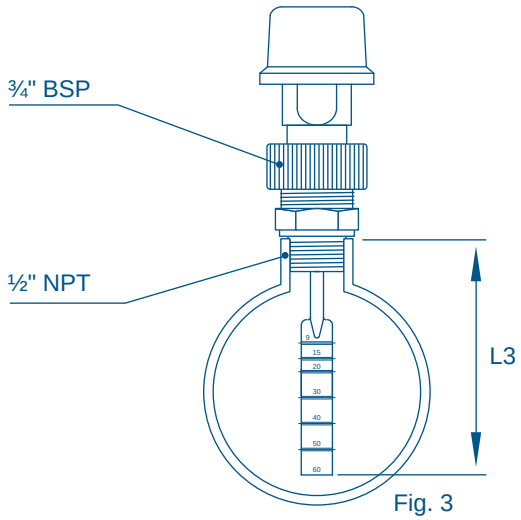

Fig. 3

In order to shorten the paddle to the required length, use a side cutter.
When cutting, hold the paddle tight above the cut surface.

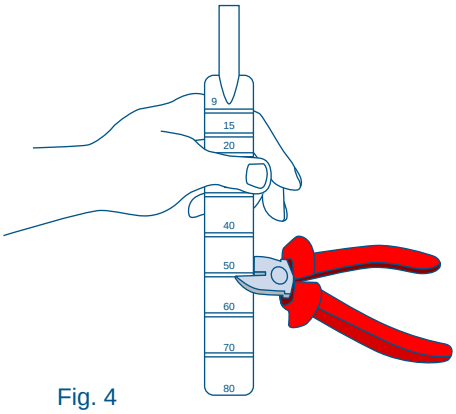
Fig. 4

Electrical Connection

Danger of death due to electrical voltage!
Work on electrical installations may only be carried out by qualified electricians or by instructed persons working under the guidance and supervision of a qualified electrician, in accordance with the electrical regulations.
Always de-energize the system before connecting the wires of the mains cable.

CAUTION: Ensure that the maximum electrical contact load specified on the type plate is never exceeded; otherwise the reed contact integrated in the switching unit will be damaged.
Inductive loads impair switching capacity. Please ask the manufacturer for information on protective circuits.

Elbow Plug Connector

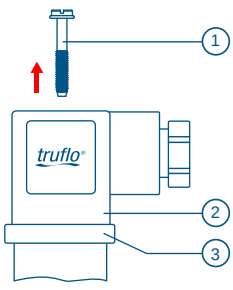

Fig. 1

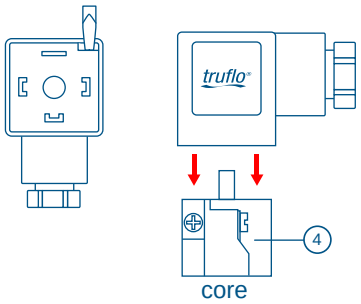

Fig. 2

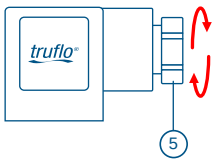

Fig. 3

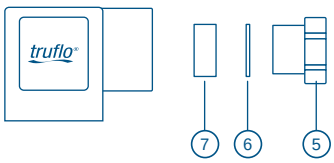

Fig. 4

- Loosen the central screw (pos. 1) and disconnect the junction box (pos. 2) from the connector (pos. 3), Fig. 1.
- Use a screwdriver or similar tool to press out the core (pos. 4) of the junction box (Fig. 2).
- Loosen the screw Cable Gland (pos. 5) Fig. 3.
- Feed the connecting cable into the junction box via the screw connection (pos. 5), the clamping ring (pos.6) and the rubber insert (pos. 7) and subsequently connect the wires as displayed in the connection diagram (see Fig. 4).

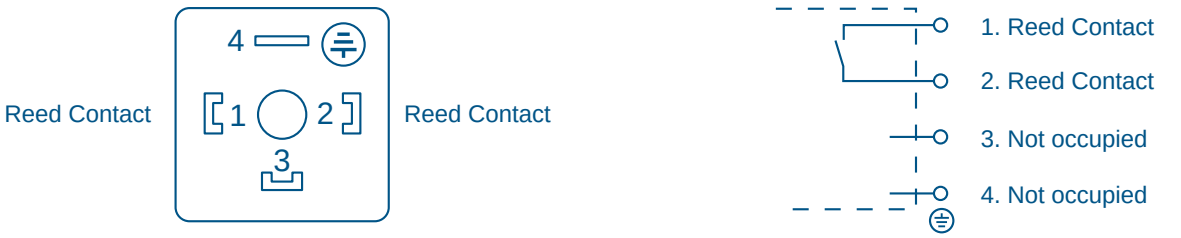

- Press the core (pos. 4) until it locks into position in the junction box (pos. 2).
- Tighten the cable gland (pos. 5).
- Place the junction box (pos. 2) on the connector (pos. 3) and retighten the central screw (pos.1).
- To guarantee the protection class IP 65 per EN 60529, the applied connecting cable has to have a sheathing diameter of between 4.5 and 7 mm.
- Furthermore, ensure that all the connector seals (pos. 2, 3 and 7) have been correctly inserted.

Adjust Switching Unit

Standard Contact

The switching unit of the control switch enables 2 contact types:

1. Make contact (normally open): **"RED"** arrow on the switching unit
2. Break contact (normally closed): **"WHITE"** arrow on the switching unit

Contact Type	Setting	Flow Rate	Electric Contact
Make Contact (NO)	RED arrow	Increasing	Closing
		Decreasing	Opening
Break Contact (NC)	WHITE or BLUE arrow	Increasing	Opening
		Decreasing	Closing

Unless otherwise agreed to with the customer, the switching unit is factory set to make contact, i.e. opens if the set switching point is exceeded.

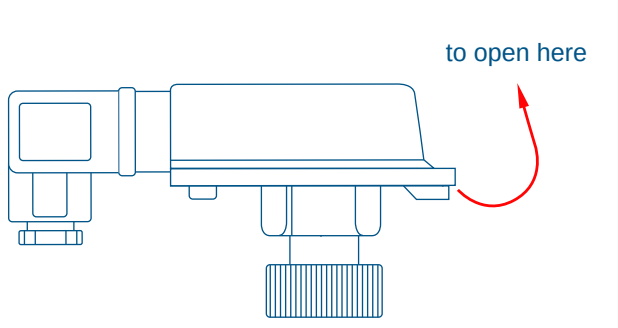

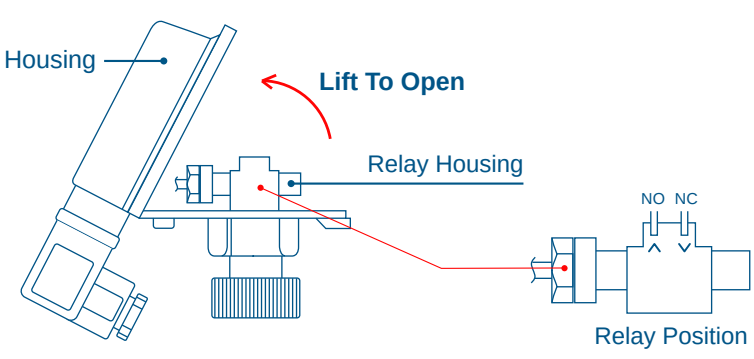

- In order to adjust the switching unit, open the cover of the switching head
- Subsequently loosen the locking screw (2.5 hexagon socket screw) and position the switching unit until the red or white arrow are visible at the entry of the switching contact guide for a desired make contact or break contact respectively.
- You can use the arrow length to make fine adjustments to the switching point: Adjust to the arrowhead means: Switching point is at a lower flow rate. Adjust to the arrow end: Switching point is at a higher flow rate.

- Carefully retighten the locking screw.
- We recommend you to use lacquer/thread locker to secure the locking screw of the switching unit after carrying out individual adjustments.
- Close the cover until it locks into place.

Make Contact (Red arrow)

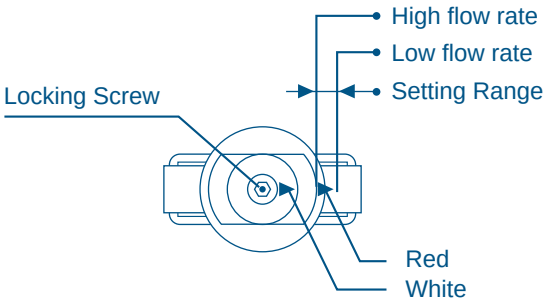

Break Contact (White arrow)

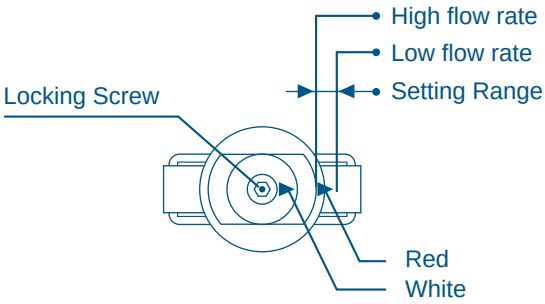

The switching unit does not need to be adjusted when the customer requests a factory set switching point.

Dimensions

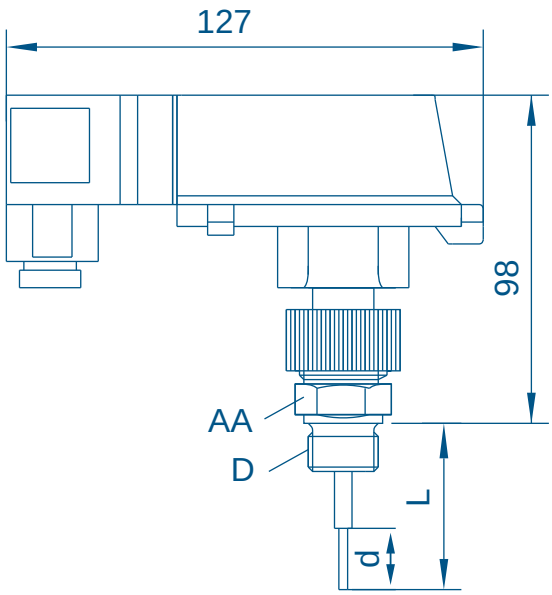

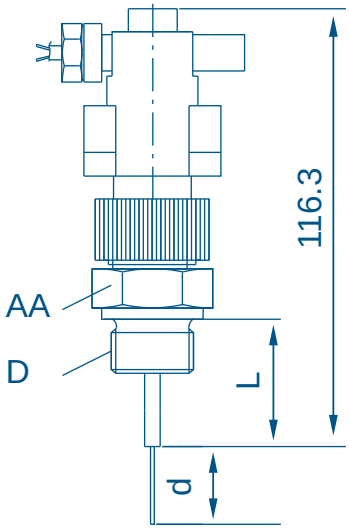

Model	Pipe Size	Connection D	Max. Flow m3/h, Water	Rising Flow Rate L/min, Water	Falling Flow Rate L/min, Water	AA (mm)	L (mm)	D (mm)
FES-005-2	½ - 2"	½" NPT	20	1 | 2	0.9 | 1.9	27	52	12 X 20
FES-005-3	3"	½" NPT	30	3 | 6	2.9 | 5.5	27	52	12 X 20
FES-005-4	4"	½" NPT	40	4.8 | 8	4.6 | 7.5	27	52	12 X 20
FES-005-41	4"	½" NPT	70	4.5 | 5.5	4 | 5	27	112	12 X 80
FES-005-6	6"	½" NPT	110	8 | 11	7.8 | 10	27	112	12 X 80
FES-005-8	8"	½" NPT	120	18 | 24.2	17.5 | 24	27	112	12 X 80

Warranty, Returns and Limitations

Warranty

Icon Process Controls Ltd warrants to the original purchaser of its products that such products will be free from defects in material and workmanship under normal use and service in accordance with instructions furnished by Icon Process Controls Ltd for a period of one years from the date of sale of such products. **Icon Process Controls Ltd** obligation under this warranty is solely and exclusively limited to the repair or replacement, at **Icon Process Controls Ltd** option, of the products or components, which I**con Process Controls Ltd** examination determines to its satisfaction to be defective in material or workmanship within the warranty period. Icon Process Controls Ltd must be notified pursuant to the instructions below of any claim under this warranty within thirty (30) days of any claimed lack of conformity of the product. Any product repaired under this warranty will be warranted only for the remainder of the original warranty period. Any product provided as a replacement under this warranty will be warranted for the one year from the date of replacement.

Returns

Products cannot be returned to **Icon Process Controls Ltd** without prior authorization. To return a product that is thought to be defective, go to **www.iconprocon.com**, and submit a customer return (MRA) request form and follow the instructions therein. All warranty and non-warranty product returns to **Icon Process Controls Ltd** must be shipped prepaid and insured. **Icon Process Controls Ltd** will not be responsible for any products lost or damaged in shipment.

Limitations

This warranty does not apply to products which: 1) are beyond the warranty period or are products for which the original purchaser does not follow the warranty procedures outlined above; 2) have been subjected to electrical, mechanical or chemical damage due to improper, accidental or negligent use; 3) have been modified or altered; 4) anyone other than service personnel authorized by Icon Process Controls Ltd have attempted to repair; 5) have been involved in accidents or natural disasters; or 6) are damaged during return shipment to **Icon Process Controls Ltd** reserves the right to unilaterally waive this warranty and dispose of any product returned to **Icon Process Controls Ltd** where: 1) there is evidence of a potentially hazardous material present with the product; or 2) the product has remained unclaimed at Icon Process Controls Ltd for more than 30 days after Icon Process Controls Ltd has dutifully requested disposition. This warranty contains the sole express warranty made by **Icon Process Controls Ltd** in connection with its products. ALL I**MPLIED WARRANTIES, INCLUDING WITHOUT LIMITATION, THE WARRANTIES OF MERCHANTABILITY AND FITNESS FOR A PARTICULAR PURPOSE, ARE EXPRESSLY DISCLAIMED**. The remedies of repair or replacement as stated above are the exclusive remedies for the breach of this warranty. I**N NO EVENT SHALL Icon Process Controls Ltd BE LIABLE FOR ANY INCIDENTAL OR CONSEQUENTIAL DAMAGES OF ANY KIND INCLUDING PERSONAL OR REAL PROPERTY OR FOR INJURY TO ANY PERSON. THIS WARRANTY CONSTITUTES THE FINAL, COMPLETE AND EXCLUSIVE STATEMENT OF WARRANTY TERMS AND NO PERSON IS AUTHORIZED TO MAKE ANY OTHER WARRANTIES OR REPRESENTATIONS ON BEHALF OF Icon Process Controls Ltd**. This warranty will be interpreted pursuant to the laws of the province of Ontario, Canada.

If any portion of this warranty is held to be invalid or unenforceable for any reason, such finding will not invalidate any other provision of this warranty

For additional product documentation and technical support **visit www.iconprocon.com | e-mail: sales@iconprocon.com support@iconprocon.com | Ph: 905.469.9283**

ICON™ PROCESS CONTROLS

Corrosion-Free
Instrumentation Equipment

~~CORROSION~~

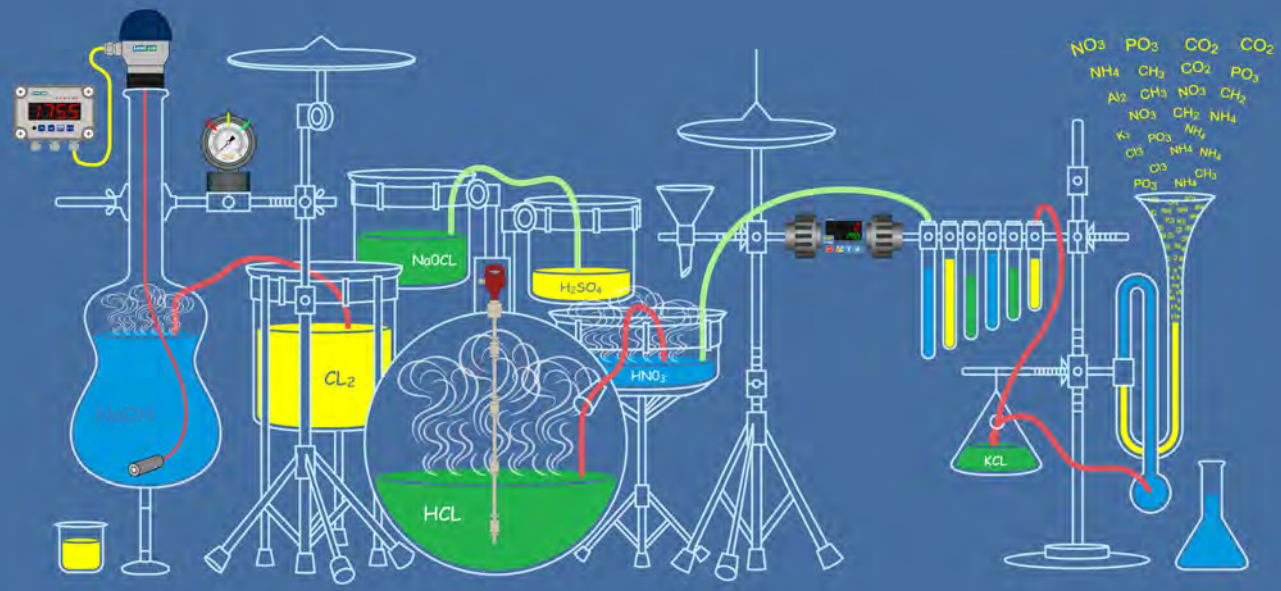

We Measure & Control All Kinds of Corrosive Liquid S#*%

'Industry's Most Extensive Line of Corrosion-Free Instrumentation' Equipment'

ICON™ PROCESS CONTROLS

Corrosion-Free Instrumentation Equipment