PULSATION DAMPER

FPD 06, FPD 1.06
FPD 10, FPD 1.10

FPD 06 KP Z

- A: Pump **A**ccessories
- KP/KP .51 / KT / TT
- 06 / 1.06 / 10 / 1.10
- FPD / UFPD
- - / PMLxxxx / PLxxxx [Ch. 1]

Operating and Installation Instructions

Read and observe these Operating and Installation Instructions!

An additional letter prefixing the FPD model code is a country-specific designation, with no technical relevance.

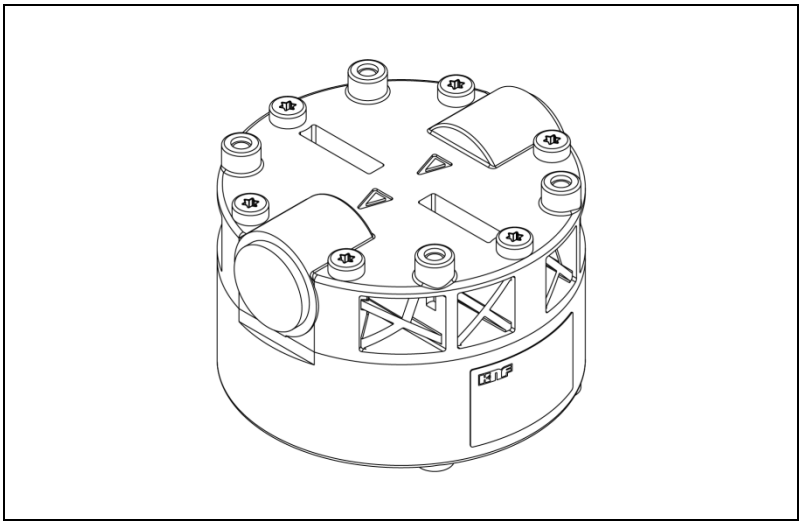

Contents **Page**

1. About this document 2
2. Use 3
3. Safety 5
4. Technical data 7
5. Assembly and function 9
6. Installation and connection 10
7. Servicing 12
8. Troubleshooting 14
9. Decontamination declaration 15

KNF Flodos AG
Wassermatte 2
6210 Sursee, Switzerland

Tel. +41 (0)41 925 00 25
Fax +41 (0)41 925 00 35

www.knf-flodos.ch
info@knf-flodos.ch

1. About this document

1.1. Use of the Operating and Installation Instructions

The Operating and Installation Instructions are part of the liquid pulsation damper.

➔ Pass on the Operating and Installation Instructions to the next owner.

Customer projects

Customer-specific projects (liquid pulsation dampers which begin with "PL" or "PML") may differ from the Operating and Installation Instructions.

➔ In the case of projects, take note of any additionally agreed specifications.

1.2. Symbols and markings

Warning



WARNING

This symbol indicates a potential danger.

It also indicates the possible consequences of failure to observe the warning. The signal word (e.g. "Warning") indicates the level of danger.

➔ This specifies measures for avoiding the danger and the consequences of failure to implement these measures.

Danger levels

Signal word	Meaning	Consequences if not observed
DANGER	warns of immediate danger	Consequences include death or serious injuries and/or serious property damage
WARNING	warns of possible danger	Death or serious injuries and/or serious property damage are possible
CAUTION	warns of a potentially dangerous situation	Minor injuries or damage to property are possible

Tab. 1

Other information and symbols

➔ This indicates an activity (step) that needs to be carried out.

1. This indicates the first step of an activity to be carried out. Any additional steps required are numbered consecutively.

i This symbol indicates important information.

2. Use

2.1. Intended use

The liquid pulsation damper is intended for pulsation damping when transferring and metering liquids.

Owner's responsibility

Operating parameters and conditions

Only install and operate the liquid pulsation damper under the operating parameters and conditions described in Chapter 4, Technical data.

Only complete liquid pulsation dampers may be taken into service.

Requirements for transferred medium

Before transferring or metering a medium, check that it can be transferred without risk in the specific application case.

Before using a medium, make sure that it is compatible with the materials used to construct the upper section and the separating diaphragm.

The temperature of the medium must lie within the permissible temperature range (see Chapter 4).

The transferred medium should not contain particles as these can prevent the liquid pulsation damper from working correctly. If this cannot be ensured, a filter with a sufficiently large filter area must be used upstream of the liquid pulsation damper.

.51* version – version with food grade approval

The .51 versions of our liquid pulsation dampers have been certified by NSF according to the standard NSF/ANSI 169 and are therefore suitable for use with foodstuffs without any restrictions.

All materials used have been checked through a series of toxicological tests. In order to ensure that the food grade quality is maintained, NSF will carry out a yearly audit checking our certified products.

Only the liquid pulsation dampers marked with ".51" are NSF-certified and contain a defined material combination that also has a FDA certificate of conformity.

NSF: National Sanitary Foundation
FDA: Food and Drug Administration
ANSI: American National Standard Institute

** Liquid pulsation dampers with other customer-specific certified material combinations are available on request.*

➔ All certified liquid pulsation dampers are clearly marked with ".51" in the type designation along with the NSF-logo on the type plate. If either or both of these markings are missing, the liquid pulsation damper is not certified.

➔ Because the cleaning requirements of the liquid pulsation dampers depend on the application, KNF is unable to guarantee cleaning options. The responsibility for cleaning therefore lies with the user. While the NSF/ANSI 169 standard regulates OEM products, it does not define cleaning methods for specific OEM products.

➔ All parts in contact with the medium can be replaced as spare parts without losing the certification. Component parts cannot be traded as certified parts. When replacing parts/assemblies only use original KNF parts.

2.2. **Improper use**

The liquid pulsation damper must not be operated in a potentially explosive atmosphere.
For special modifications outside the standard technical specifications, please contact a KNF pump specialist.

3. Safety

Follow the safety information in Chapter 6. Installation and connection.

The liquid pulsation damper is built according to the generally recognised rules of technology and in accordance with the pertinent occupational safety and accident prevention regulations. Nevertheless, potential dangers during use can result in injuries to the user or others or in damage to the liquid pulsation damper or other property. Only use the liquid pulsation damper in perfect working order and in accordance with its intended use. Always ensure adherence to the Operating and Installation Instructions and work in a safety-conscious manner.

Personnel

Make sure that only trained and instructed personnel or specially trained personnel work on the liquid pulsation damper. This especially applies to assembly, connection and servicing work.

Make sure that all personnel have read and understood the Operating and Installation Instructions, and in particular the "Safety" chapter.

Working in a safety-conscious manner

Always ensure adherence to all pertinent accident prevention and safety regulations when working on and operating the liquid pulsation damper.

Handling dangerous media

When transferring dangerous media, observe the safety regulations for handling such media.

Notes

Always ensure adherence to all information stickers on the liquid pulsation damper, such as flow direction arrows and type plates, and keep stickers in legible condition.

Environmental protection

All replacement parts should be properly stored and disposed of in accordance with the applicable environmental protection regulations. Ensure adherence to the pertinent national and international regulations. This especially applies to parts contaminated with toxic substances.

Disposal

Dispose of all packaging in an environmentally-appropriate manner. The packaging materials are recyclable.



Ensure that the liquid pulsation damper is disposed of in an environmentally-appropriate manner at the end of its useful life. Use appropriate waste collection systems for the disposal of end-of-life equipment. Used liquid pulsation dampers contain valuable recyclable materials.



EU directives/standards

For the purposes of the Machinery Directive 2006/42/EC, liquid pulsation dampers are “partly completed machinery", and are therefore to be regarded as not ready for use. Partly completed machinery may not be commissioned until such time as it has been determined that the machine in which the partly completed machinery is to be assembled conforms to the provisions of Machinery Directive 2006/42/EC. The essential requirements of Annex I of Directive 2006/42/EC (general principles) are applied and observed.

Customer service and repairs	All repairs to the liquid pulsation damper must be carried out by the relevant KNF Customer Service team. Only use genuine parts from KNF for servicing work.

4. Technical data

4.1. Design variants

The FPD series liquid pulsation damper is available in the following models:

Basic type selection

	Basic type selection	
	Damper volume [ml]	Pump type
FPD 06	6	NF 5 / NF 10 / NF 25 NF 30 / NF 60 NF 100
FPD 1.06	6	NF 1.5 / NF 1.10 NF 1.30 / NF 1.60
FPD 10	10	NF 300 / NF600
FPD 1.10	10	NF 1.100 / NF 1.300 NF 1.600

Tab. 2

Materials selection

	Head material selection	
FPD 06 KPZ FPD 06 KP.51Z* FPD 1.06 KPZ FPD 1.06 KP.51Z* FPD 10 KPZ FPD 10 KP.51Z* FPD 1.10 KPZ FPD 1.10 KP.51Z*	Upper section Separating dia-phragm	PP EPDM
FPD 06 KTZ FPD 1.06 KTZ FPD 10 KTZ FPD 1.10 KTZ	Upper section Separating dia-phragm	PP FFKM
FPD 06 TTZ FPD 1.06 TTZ FPD 10 TTZ FPD 1.10 TTZ	Upper section Separating dia-phragm	PVDF FFKM

Tab. 3 ** Version with NSF certificate (see Chapter 2.1)*

4.2. General data

Hydraulic ratings

Parameter	Value
Permissible pressure head [mWG] FPD 06	20
Permissible pressure head [mWG] FPD 1.06	60[1)]
Permissible pressure head [mWG] FPD 10	20
Permissible pressure head [mWG] FPD 1.10	60[1)]

Tab. 4

[1)] For models with KT / TT max. 40 mWG

Hydraulic connections

Parameter	Value
Thread for connecting piece FPD 06 / 1.06	G 1/8"
Thread for connecting piece UFPD 06 / 1.06	NPT 1/8"
Thread for connecting piece FPD 10 / 1.10	G 3/8"
Thread for connecting piece UFPD 10 / 1.10	NPT 3/8"

Tab. 5

Other parameters

Parameter	Value
Permissible ambient temperature range [°C]	+ 5 to + 40
Permissible media temperature range [°C]	+ 5 to + 80

Tab. 6

General data

Parameter	Value
Weight[1)] [g] FPD 06 / 1.06	85
Weight[1)] [g] FPD 10 / 1.10	165

Tab. 7

[1)] The weight may differ slightly from the stated value, depending on the version.

5. Assembly and function

5.1. The working principle

The liquid pulsation damper is constructed so that it reduces the pressure pulsation that is generated in particular by reciprocating displacement pumps.
In doing so, the quality of the damping is significantly influenced by the banking-up pressure generated in the liquid pulsation damper. Various parameters are important in determining the quality of the damping. The main criteria are the flow rate, residual pulsation and the system pressure downstream of the liquid pulsation damper.

6. Installation and connection

Always install liquid pulsation dampers under the operating parameters and conditions described in Chapter 4, Technical data.

Observe the safety precautions (see Chapter 3).

6.1. Installation

Mounting information

➔ The liquid pulsation damper should be mounted as closely as possible to the pump head on the pressure side.

➔ The deployment of the liquid pulsation damper when using a pump with integrated overpressure limiting (.27) is not recommended. In this case, to secure the system a pressure control valve (FDV) should be connected downstream of the liquid pulsation damper in an external circuit.

➔ Long connection hoses between the pump and the liquid pulsation damper are exposed to the banking-up pressure that builds up in the liquid pulsation damper. For this reason, an increased oscillation and pulsation may occur in these connection lines, but will not have any effect on the residual pulsation.

Mounting dimensions

➔ Mounting dimensions (see Fig. 1 and 2)

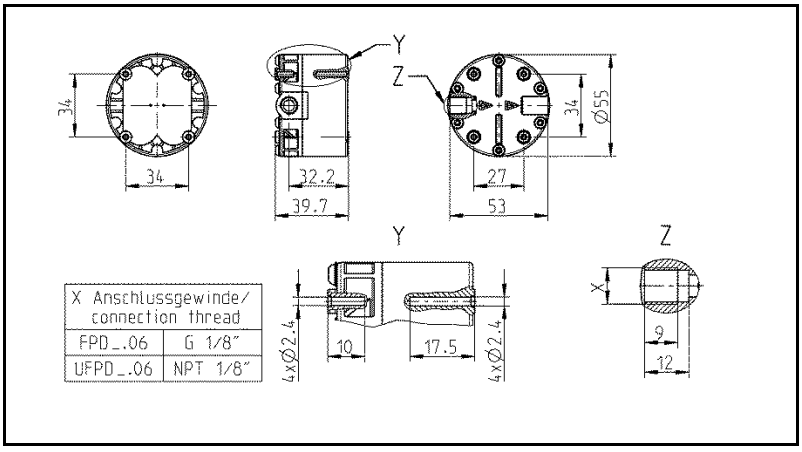

Fig. 1: Mounting dimensions FPD_.06

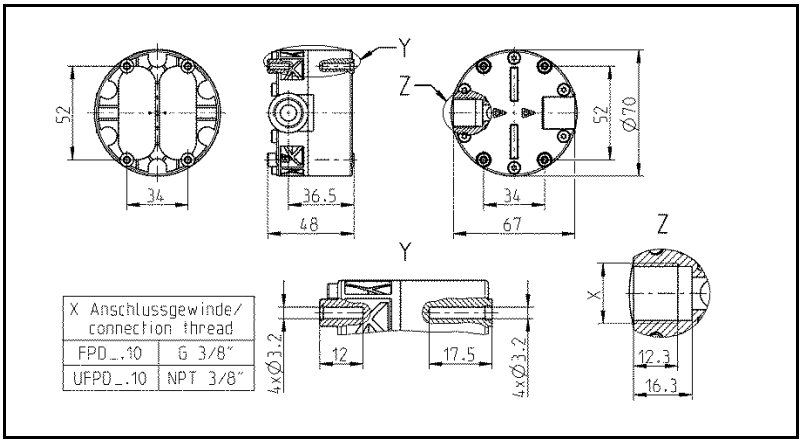

Fig. 2: Mounting dimensions FPD_.10

General information

Be aware of the following before commissioning the liquid pulsation damper:

1. Follow the safety regulations specific to the media used.
2. The materials of the liquid pulsation damper, the hose connections and the hoses themselves must be sufficiently chemically resistant to the liquid being transferred (see Chapter 4.1, Tab. 3).
3. Check the correct and tight connection of hoses and any transition joints (hose connectors / hose, etc.).

➔ We recommend securing transition joints between hose and hose connectors with hose clamps or other clamping elements. If you are working in an area under pressure, this is imperative to prevent the hoses from coming off the hose connectors.

➔ In the case of special models, the internal nozzle cross-section (Ø) specified in the system parameters is noted on the type plate, e.g. *0 D1.2.*

Mechanical

➔ The liquid pulsation damper can be fastened from above and below using the four holes.

➔ It can be mounted in any orientation.

6.2. **Hydraulic**

➔ Remove the protective caps from the connections.

➔ Mount the hose connectors (observe the recommended hose inner diameter of the liquid pulsation damper).

➔ The hydraulic connections (supply and output sides) are defined using directional arrows on the upper section.

➔ Push the hoses on the supply and output sides over the hose connectors and secure.

➔ Check that the system is leak-tight.

➔ The liquid pulsation damper, hoses and other components must be rated for the maximum permissible operating pressure.

7. Servicing

7.1. Servicing schedule

Component	Servicing interval
Liquid pulsation damper	- Regular inspection for external damage or leaks
Upper section	- Clean when the flow rate decreases
Separating diaphragm, auxiliary diaphragm, O-ring, sealing cord and damping element	- Change as soon as pulsation damping decreases, preferably sooner
Filter (accessory)	- Change if it is dirty

Tab. 8

7.2. Cleaning

Information on procedure



WARNING

Dangerous substances in the liquid pulsation damper can cause a health hazard
Depending on the medium transferred, caustic burns or poisoning are possible.

➔ Wear protective clothing if necessary, e.g. protective gloves.

➔ Rinse the liquid pulsation damper with a neutral liquid and pump empty.

7.2.1. Flushing the liquid pulsation damper

➔ When transferring aggressive media, KNF recommends flushing the liquid pulsation damper with air under atmospheric conditions for several minutes prior to switch off (if necessary for safety reasons: use an inert gas). This will extend the service life of the diaphragm.

7.2.2. Cleaning the liquid pulsation damper

➔ Where possible, wipe the components with a dry cloth. Do not use cleaning solvents as these may corrode plastic parts.

➔ If there is compressed air available, blow off components.

Prior requirements

- Liquid pulsation damper free of hazardous materials
- Hoses removed from the liquid pulsation damper
- We recommend replacing the separating diaphragm when the upper section is removed.

Tools

Pulsation damper	Quantity	Tool
FPD 06 / 1.06	1	T10 Torx screwdriver
FPD 10 / 1.10	1	T20 Torx screwdriver

Tab. 9

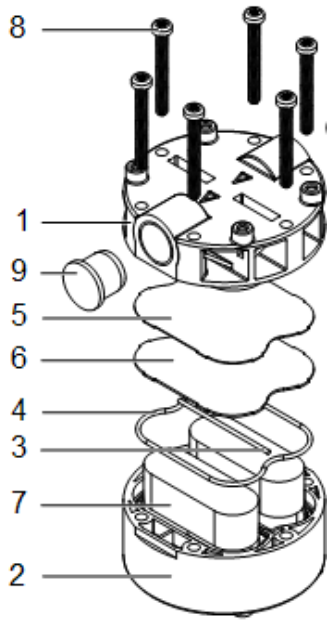

Fig. 3

1 Upper section
2 Lower section
3 Sealing cord
4 O-ring
5 Separating diaphragm
6 Auxiliary diaphragm
7 Damping element
8 Screws
9 Protective plug

Preparatory steps

1. On decommissioning, the entire installation as well as the liquid pulsation damper must be flushed with a neutral liquid and then emptied.
2. It is possible to remove the hoses from the liquid pulsation damper but it is not imperative to do so.

7.3. Dismantling the upper section

1. Undo the four or six screws (**8**) and remove the entire upper section.

Changing the separating diaphragm

2. Remove the separating diaphragm (**5**).
3. Check the position of the auxiliary diaphragm (**6**).
4. Carefully insert the new separating diaphragm (**5**).

Changing the auxiliary diaphragm

5. Remove the auxiliary diaphragm (**6**).
6. Check the position of the O-ring (**4**) and the sealing cord (**3**).
7. Carefully insert the new auxiliary diaphragm (**6**).

7.4. Changing the O-ring

1. Remove the old O-ring (**4**).
2. Insert the new O-ring (**4**) in its groove.

7.5. Changing the sealing cord

1. Remove the old sealing cord (**3**).
2. Insert the new sealing cord (**3**) in its groove.

7.6. Changing the damping elements

1. Remove the old damping elements (**7**).
2. Insert the new damping elements (**7**).
3. Depending on the type of liquid pulsation damper, the elements will protrude from the recess edges. This pre-tensions the damping elements during assembly.

7.7. Mounting the upper section

1. Place the upper section (**1**) carefully on top of the lower section (**2**).
2. Alternately tighten the four or six screws (**8**).
3. Remount the dismantled hoses on the upper section of the liquid pulsation damper.

8. Troubleshooting

Flow rate, suction head or pressure head is too low The pump does not achieve the performance stated in the technical data or on the data sheet.	
Cause	Fault remedy
Components in the system connected to the suction and pressure sides, such as hoses, valves or filters, are causing too much resistance	➔ Modify installation, check cross-sections of components
Hose connections are not leak-tight	➔ Secure transition joints between hose and hose connectors with clamps or other clamping elements
Particles in the liquid pulsation damper	➔ Clean the liquid pulsation damper, install suction-side filter if required (see Chapter 7.2)
Viscosity of the transferred medium is too high	➔ Contact KNF
Incorrect interchange of outlet and inlet line connections	➔ Remove outlet and inlet lines and re-connect correctly
The liquid pulsation damper parts are not resistant to the medium to be transferred	➔ Replace with a resistant variant
Separating diaphragm is worn	➔ Replace separating diaphragm (see Chapter 7.3)

Tab. 12

Fault cannot be rectified

If you are unable to identify any of the above causes, please send the liquid pulsation damper to KNF customer services (see address on last page).

1. Flush the liquid pulsation damper to clear it of any hazardous or aggressive fluids (*see Chapter 7.2.1).*
2. Remove liquid pulsation damper.
3. Clean the liquid pulsation damper (*see Chapter 7.2.2*).
4. Send the liquid pulsation damper to KNF customer services along with the completed decontamination declaration (s*ee Chapter 9*). Please indicate the medium that the pump is used to transfer.

9. Decontamination declaration

KNF shall only undertake to repair a liquid pulsation damper on condition that the customer provides certification of the transferred media and the cleaning of the liquid pulsation damper (decontamination declaration).

➔ Copy this page.

➔ Enter the liquid pulsation damper model, the serial number and the transferred media in the form below and send the signed form together with the flushed and cleaned liquid pulsation damper to KNF customer services (see address on last page).

Customer decontamination declaration for repair order

We confirm that the liquid pulsation damper below has been used to transfer the following media, and that the liquid pulsation damper has been flushed and cleaned.

Pulsation damper model	
Serial No.	
Transferred media	

The liquid pulsation damper does not contain aggressive, biological, radioactive, poisonous, or other dangerous media.

Company Date/Signature

KNF worldwide

Please find your local KNF partners at: www.knf.com