FES Series
Plastic Flow Switch

- Excellent Pump Protection
- Hirschmann DIN Connection | Wire at Sensor
- Low Flow Switch Points
- Corrosion Resistant PP Body | Paddle
- ½ - 8" Pipe Sizes
- IP65 | NEMA 4X Enclosure
- Simple Installation Process
- Easily Changed from NO to NC

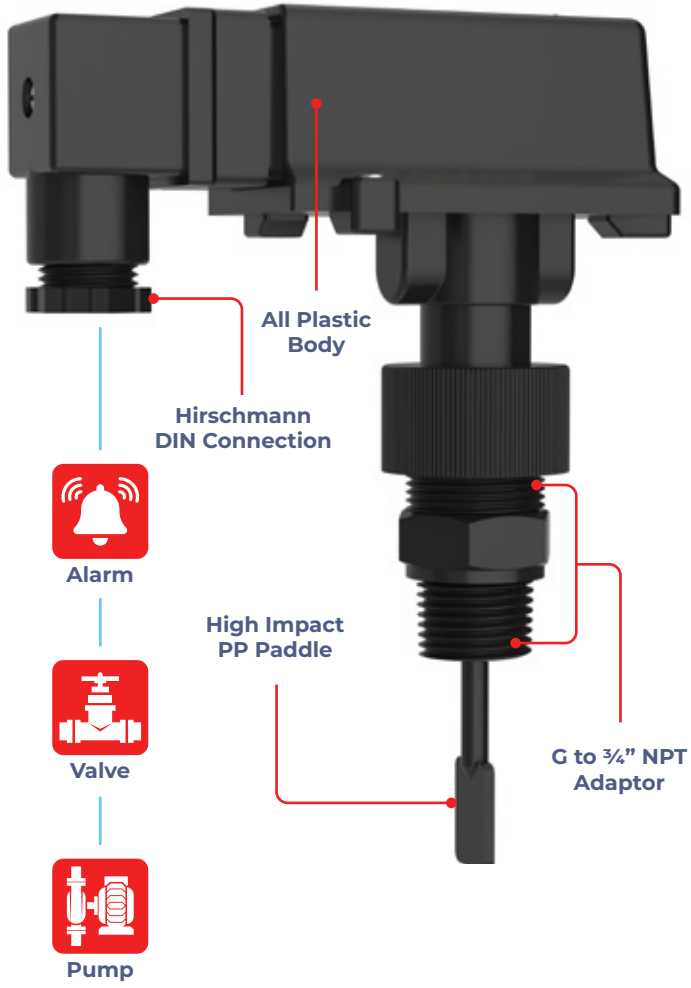

Protect your equipment

The Truflo® FES Series Flow Switch is designed to detect liquid flow or low/no flow.

The FES switch encompasses a SPST contact that can be wired to energize a device when liquid flow either exceeds or drops below the set flow rate.

The FES Series is an excellent choice for corrosive liquid services, water treatment, waste treatment, liquid pumping and process control systems.

The FES Flow Switch can control devices such as pumps, motorized valves and alarm devices.

Example

- Prevent Pumps from Running Dry
- Notification for Filter | Strainer Change-Out
- Output to Alarm | Shut Off Pump

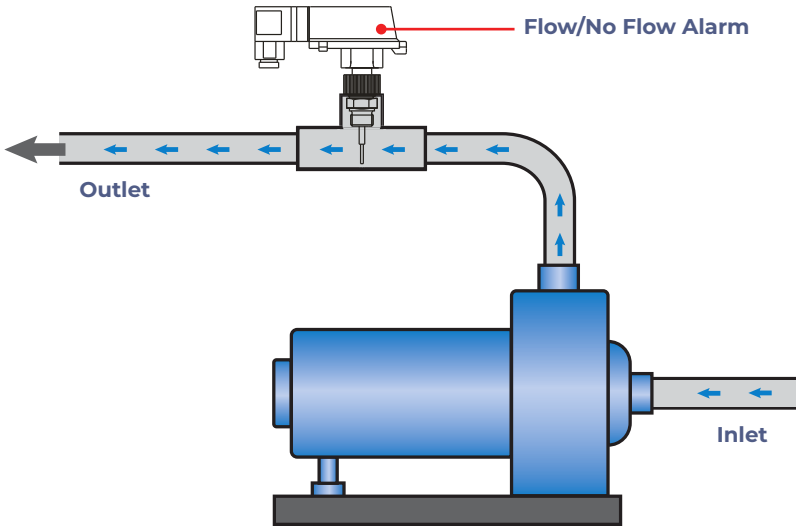

Simple Relay Switch | NO | NC

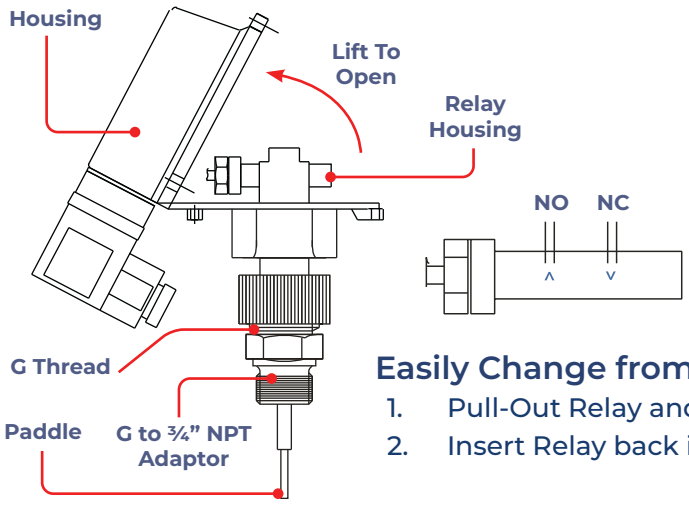

Easily Change from NO to NC

1. Pull-Out Relay and Rotate 180°
2. Insert Relay back into Position

PP

RoHS Compliant CE

FES Series
Plastic Flow Switch

truflo®

Specifications

Body Material	PP
O-Ring	Viton
Max. Working Temperature	190°F | 88°C
Max. Working Pressure | Non-Shock	145 psi | 10 bar
Max. Contact Current	1.5A
Max. Power Supply	85 VDC | 250 VAC
Relay	SPST Reed Switch | NO | NC | Adjustable
Protection Class	IP65 | NEMA 4X

Electrical Connections

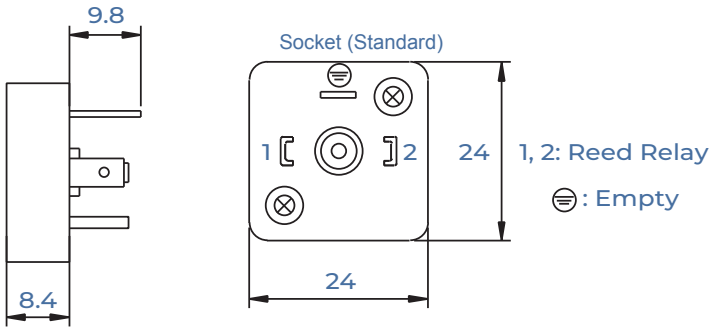

Dimensions

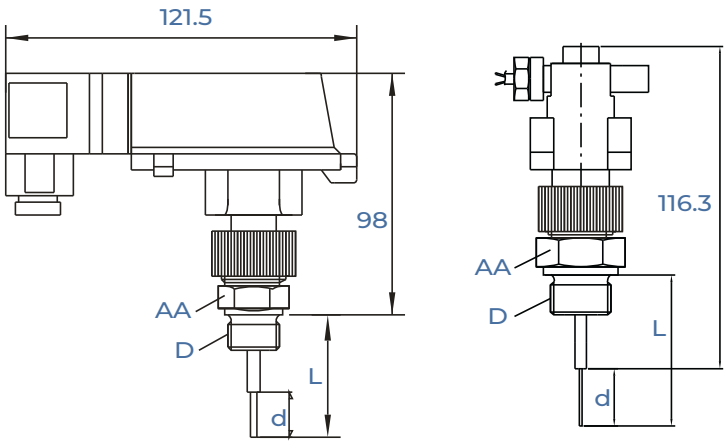

Model Selection

Model	Pipe Size	Connection Size D	Max. Flow m3/h, Water	Rising Flow Rate L/min, Water	Falling Flow Rate L/min, Water	AA1-AA (MM)	L (MM)	D (MM)
FES-005-2	½- 2"	½" NPT	20	1 | 2	0.9 | 1.9	27	52	12 X 20
FES-005-3	3"	½" NPT	30	3 | 6	2.9 | 5.5	27	52	12 X 20
FES-005-4	4"	½" NPT	40	4.8 | 8	4.6 | 7.5	27	52	12 X 20
FES-005-41	4"	½" NPT	70	4.5 | 5.5	4 | 5	27	112	12 X 80
FES-005-6	6"	½" NPT	110	8 | 11	7.8 | 10	27	112	12 X 80
FES-005-8	8"	½" NPT	120	18 | 24.2	17.5 | 24	27	112	12 X 80