MF1000 SERIES
Magnetic Flow Meter
Operating Manual



ICON™ PROCESS CONTROLS
Corrosion-Free
Instrumentation Equipment

Table of Contents

Safety Information 03
Technological Progress 03
Product Description 03
Features 04
Technical Specifications 04
The Working Principle 04
Product Structure and Product Form 05
Product Technical Performance Indicators 07
Product Dimensions and Installation Dimensions 10
Display 12
Keyboard 12
Password 13
Menu List 13
Connection & Wiring Diagram 16
Appendix 1 Basic Parameters 19
Appendix 2 Flow Data-Logging 21
Appendix 3 Notes to Flow Correction 22
Warranty, Returns and Limitations 23

ICON™ PROCESS CONTROLS
Corrosion-Free Instrumentation Equipment

Safety Information

Please always observe the following safety instructions!
Please pay attention to the safety instructions with the following pictograms and signal words in these operating instructions :

Warning | Caution | Danger
indicates general hazardous situations or cases which, if not avoided, could result in serious injury or death.

IMPORTANT!
indicates situations or cases which, if not avoided, could result in damage or failure of the **UltraFlo®** equipment.

Notice : Is used to lead users to helpful information not related to personal injury.

Intended Use

- The Magnetic flow meter is built in accordance with industry standard EN 61010 regulations (corresponds to VDE 0411 "Safety specifications for electrical measurement, control and laboratory devices").
- The manufacturer is not liable for any injury, damage or harm due to inappropriate or unintended use or modifications of the flow meter. Conversions and/or changes to the flow meter may only be made, if they are expressly performed in accordance with the operating instructions in this operating manual.

Personnel for Installation, Commissioning and Operation

- Assembly, electrical installation, commissioning and maintenance of the flow meter must be carried out by qualified, trained personnel. The qualified personnel must have read and understood the operating instructions in this operating manual and must follow the operating instructions in this manual.
- The installer has to ensure that the flow meter is correctly connected according to the electrical connection diagrams in this operating manual.
- Serious injury or death from electric shock may occur if wiring, installation, disassembly or removal of wires is performed while electrical power is energized

Technological Progress

The manufacturer reserves the right to revise, alter, or modify the flow meter to the most current technology without special prior notice. Further information about the latest updates and potential additions to these operating instructions are available from **www.iconprocon.com**

Product Description

The **Truflo® MF1000** Series Flanged Magnetic Flow Meters provide long-lasting, reliable performance in even the most challenging applications. The **MF1000** is a microprocessorbased flow transmitter that has been engineered for high performance, easy installation, commissioning and maintenance.

The **Truflo® MF1000** is truly robust, cost-effective and suitable for allround applications and has a measuring accuracy of ± 0.5% of the flow rate.

The **Truflo® MF1000** Series comes standard with a PTFE **Teflon®** liner, Carbon Steel body and Hastelloy C Electrodes. However, a variety of materials are available to ensure the flow meter is chemically compatible with your application.

Features

- 4-20mA | Frequency Pulse | RS-485
- Standard PTFE Teflon® Liner
- High Accuracy: ±0.5% F.S.
- Excellent Chemical Resistance
- Full Port Design
- IP 68 Protection
- Carbon Steel Body
- PTFE Teflon® Liner

Technical Specifications

General	
Accuracy	±0.5%
Output	4-20mA | Frequency Pulse | RS-485
Viscosity | Particles	> 90 Micron
Temperature Rating	-40 - 248°F | -40 - 120°C
Power Supply	24 VDC
Protection Class	IP 68
Range Ratio	20:1

The Working Principle

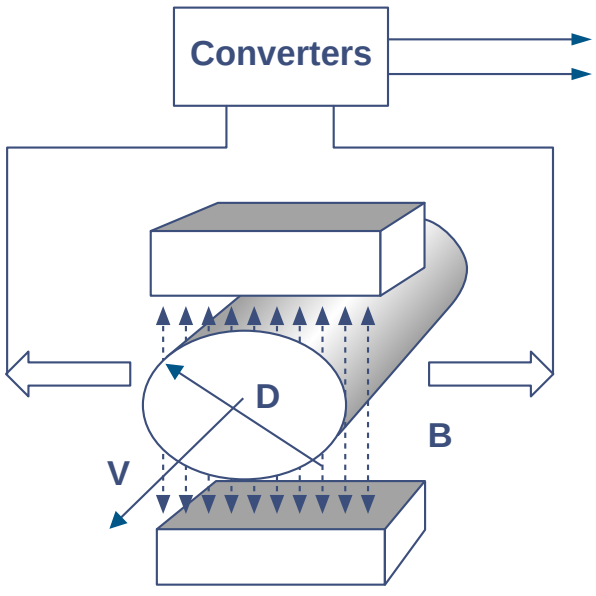

Working Principle Diagram

Mathematical Physics Model

The measuring principle of the electromagnetic flowmeter sensor is based on Faraday's law of electromagnetic induction. A pair of detecting electrodes are mounted on the wall of the tube perpendicular to the axis of the measuring tube and the magnetic field lines of the magnetic field. When the conductive liquid moves along the axis of the measuring tube, the conductive liquid acts as cutting magnetic line. An induced potential is generated, which is detected by two electrodes on the measuring tube, and the magnitude is: E=K • B • V • D

Where : E : induced potential

K : meter constant

B : magnetic induction

V : measuring the average flow velocity in the cross section of the tube

D : the inner diameter of the measuring tube

When measuring the fluid, the fluid flows through a magnetic field perpendicular to the direction of flow. The flow of the conductive fluid induces a potential proportional to the average flow rate, thus requiring that the conductivity of the flowing liquid being measured be above the minimum conductivity. The induced voltage signal is detected by two electrodes and transmitted to the converter through the cable. After signal processing and correlation calculation, the accumulated flow rate and instantaneous flow rate are displayed on the display screen of the converter.

Converter Circuit Structure

The electromagnetic flowmeter converter provides a stable excitation current to the excitation coil of the electromagnetic flow sensor. The preamplifier amplifies and converts the electromotive force induced by the sensor into a standard current signal or a frequency signal, which facilitates the display, control and adjustment of the flow. The following figure shows the converter circuit structure:

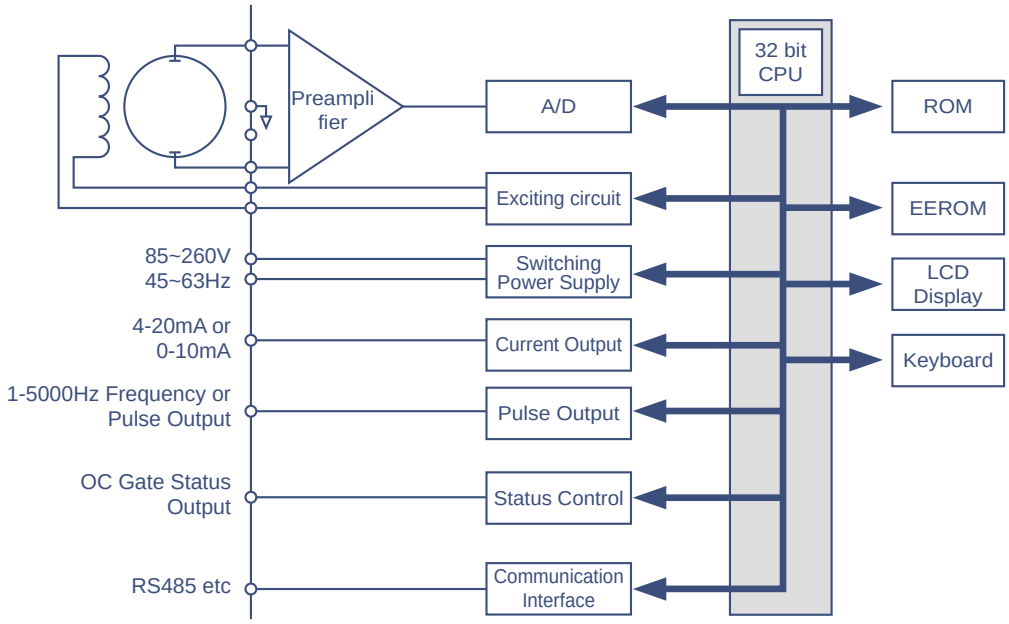

Converter Circuit Structure

Product Structure and Product Form

Product Structure

The structure of the electromagnetic flowmeter is mainly composed of a magnetic circuit system, measuring conduit, electrodes, housing and converter. The components of the magnetic circuit system, measuring conduit electrodes and housing are called electromagnetic sensors.

- **Magnetic circuit system :** its role is to produce a uniform DC or AC magnetic field.
- **Measuring conduit :** its function is to pass the conductive medium to be tested. In order to prevent the magnetic flux from being shunted or short-circuited when the magnetic flux passes through the measuring conduit, the measuring conduit must adopt non-magnetic permeability, low electrical conductivity, low thermal conductivity and certain mechanical strength. Made of materials, stainless steel, glass reinforced plastic, high-strength plastic, etc., which are non-magnetic.
- **Electrode :** Its function is to draw and measure the induced potential signal proportional to it. The electrodes are typically made of non-magnetically conductive stainless steel and are required to be flush with the liner so that the fluid passes unimpeded.
- **Lining :** There is a complete electrical insulation lining on the inside of the measuring tube and on the flange sealing surface. It directly contacts the medium to be measured, and its function is to increase the corrosion resistance of the measuring conduit and prevent the induced potential from being short-circuited by the metal measuring tube wall. Lining materials are mostly corrosion-resistant, high-temperature resistant, wear-resistant rubber, fluoroplastics, ceramics, etc.
- **Converter :** The induced potential signal generated by the flow of the medium is very weak and is greatly affected by various interference factors. The function of the converter is to amplify and convert the induced potential signal into a unified standard signal and suppress the main interference signal. Its task is to amplify and convert the induced potential Ex signal detected by the electrode into a unified standard DC signal.

Selection of Electrode and Lining

The electromagnetic flowmeter is available in 7 different electrodes and a lining of 7 different materials.

Electrode Material and Scope of Application

No.	Electrode Material	Scope of application
1	316L	For the measurement of water, sewage or slightly corrosive media of inorganic and organic acids.
2	B (HB)	It has good corrosion resistance to hydrochloric acid at all concentrations below the boiling point, and is also resistant to corrosion by non-oxidizing acids, alkalis, and non-oxidized salt liquids such as sulfuric acid, phosphoric acid, hydrofluoric acid, and organic acids.
3	C(HC)	Resistant to oxidizing acids such as nitric acid, mixed acid, or corrosion of mixed media of chromic acid and sulfuric acid; also resistant to oxidizing salts such as Fe+++, Cu++ or other oxidizing agents, such as hypochlorite solutions above normal temperature, Corrosion of sea water.
4	Ti	It is resistant to seawater, various chlorides and hypochlorites, oxidizing acids (including fuming nitric acid), organic acids, alkalis, etc.; it is not resistant to corrosion by purer reducing acids (such as sulfuric acid and hydrochloric acid), but is like acid. When oxidants (such as nitric acid, Fe+++, Cu++) are contained, the corrosion resistance is greatly reduced.
5	Ta	It has excellent corrosion resistance and is very similar to glass. In addition to hydrofluoric acid, fuming sulfuric acid, fuming nitric acid, alkali, it is almost resistant to corrosion by all chemical media including boiling point hydrochloric acid, nitric acid, and sulfuric acid. Not resistant to corrosion in alkali.
6	Platinumrhodium alloy	It is suitable for almost all chemicals, but not for aqua regia and ammonium salts.
7	Tungsten Carbide	Good wear resistance, can be used for the measurement of high-abrasion medium, such as pulp, slurry and so on.

Product Technical Performance Indicators

Executive Standard	Electromagnetic Flowmeter			
Maximum Flow Rate	15m/s			
Fluid Conductivity	>5μS/cm			
Precise Rating	±0.2% of the indicated value, ±0.5% of the indicated value			
Nominal Diameter (mm)	3, 6, 10, 15, 20, 25, 32, 40, 50, 65, 80, 100, 125, 150, 200, 250, 300, 350, 400, 450, 500, 600, 700, 800, 900, 1000, 1200, 1400, 1600, 1800, 2000, 2200, 2400, 2600, 2800, 3000			
Nominal Pressure	10.0MPa, 6.3MPa, 4.0MPa, 2.5MPa, 1.6MPa, 1.0MPa, 0.6MPa			
Ambient Temperature	Electromagnetic Flowmeter	-25°C ~ +60°C		
	Converter and integrated type	-10°C ~ +60°C		
Lining Material	Neoprene, polytetrafluoroethylene (PTFE), urethane rubber, polyperfluoroethylene propylene (F46), PFA, ceramics, etc.			
Signal Electrode Type	Fixed, Scraper, Detachable			
Signal Electrode and Ground Electrode Material	316L, Hastelloy B, Hastelloy C, titanium, tantalum, platinum-rhodium alloy, tungsten carbide			
Connecting Flange Material	Carbon Steel, Stainless Steel (304, 316, 316L)			
Connection Flange Standard	GB, Ministry of Machinery Standard, Ministry of Chemical Industry Standard, ANSI, Japanese Standard			
Grounding Ring Material	Stainless Steel			
Electrical Interface	M18*1.5, M20*1.5, 1/2NPT			
Transmission Distance	Split-type electromagnetic flowmeter, the signal cable is connected between the sensor and the converter. The cable length should be less than 100m.			
Shell Protection	EntireIP65	Sensor IP68 Converter IP65	Sensor IP67 Converter IP65	Entire IP68
Supply voltage	220VAC, 24VDC, 3.6V Battery Powered, 24VDC and Battery Powered			
Power Consumption	<20W			
Display Function	Display in English, can display instantaneous flow, accumulated flow and alarm display (excitation alarm, air traffic alarm, flow over limit alarm)			

Flow Range

Flow Rate	0.3	0.4	0.5	1.0	2.0	3.0	4.0	5.0	6.0	7.0	8.0	9.0	10.0
3	0.008	0.01	0.013	0.025	0.05	0.075	0.1	0.125	0.15	0.175	0.2	0.225	0.25
6	0.03	0.04	0.05	0.1	0.2	1.3	0.4	0.5	0.6	0.7	0.8	0.9	1.0
10	0.09	0.11	0.14	0.28	0.57	0.85	1.1	1.4	1.7	2	2.3	2.5	2.8
15	0.2	0.3	0.4	0.6	1.3	1.9	2.5	3.2	3.8	4.5	5.1	5.7	6.3
20	0.4	0.5	0.6	1.1	2.3	3.4	4.5	5.7	6.8	7.9	9	10	11
25	0.6	0.7	0.9	1.8	3.5	5.3	7.1	8.8	11	12	14	16	17
32	0.9	1.2	1.4	2.9	5.8	8.7	12	14	17	20	23	26	28
40	1.4	1.8	2.3	4.5	9	14	18	23	27	32	36	41	45
50	2.2	2.8	3.5	7.1	14	21	28	35	42	49	57	64	70
65	3.6	4.8	6	12	24	36	48	60	72	84	96	100	110
80	5.4	7.2	9	18	36	57	72	90	100	120	140	160	180
100	8.4	11	14	28	57	85	110	140	170	190	220	250	280
125	14	17	22	44	80	130	170	220	260	300	350	390	440
150	20	25	32	64	120	190	250	310	380	440	500	570	630
200	34	45	57	110	220	340	450	560	670	790	900	1000	1100
250	54	71	88	180	350	530	700	880	1000	1200	1400	1500	1700
300	77	100	120	250	500	760	1000	1200	1500	1700	2000	2200	2500
350	110	140	180	350	690	1000	1300	1700	2000	2400	2700	3100	3400
400	140	180	230	450	900	1300	1800	2200	2700	3100	3600	4000	4500
450	180	230	290	570	1100	1700	2300	2800	3400	4000	4500	5100	5700
500	220	280	360	710	1400	2100	2800	3500	4200	4900	5600	6300	7000
600	310	410	510	1000	2000	3000	4000	5100	6100	7100	8100	9100	10000
700	420	550	700	1400	2700	4100	5500	7000	8300	9600	11000	12000	13000
800	550	720	910	1800	3100	5400	7200	9000	10000	12000	14000	16000	18000
900	690	920	1200	2300	4500	6800	9100	11000	13000	16000	18000	20000	22000
1000	850	1100	1500	2800	5600	8500	11000	14000	16000	19000	22000	25000	28000
1200	1300	1600	2100	4100	8100	12000	16000	20000	24000	28000	32000	30000	40000
1400	1700	2200	2800	5500	11000	16000	22000	27000	33000	38000	44000	50000	55000
1600	2200	2900	3700	7200	14000	21000	29000	36000	43000	50000	57000	65000	72000
1800	2800	3700	4600	9200	18000	27000	36000	45000	54000	64000	73000	82000	91000
2000	3400	4500	5700	11000	22000	34000	45000	56000	67000	79000	90000	100000	110000
2200	4200	5500	6900	14000	27000	41000	56000	68000	82000	95000	110000	120000	130000
2400	4900	6500	8200	16000	32000	48000	68000	81000	97000	110000	130000	140000	160000
2600	5800	7600	9600	19000	38000	57000	76000	95000	110000	130000	150000	170000	190000
2800	6700	8900	12000	22000	44000	66000	88000	110000	130000	150000	170000	190000	220000
3000	7700	10000	13000	25000	50000	76000	100000	120000	150000	170000	200000	220000	250000

Protection Level Description

The protection level of the electromagnetic flowmeter casing can be divided into the following according to the national standard GB4208:

- **IP65 :** Water spray type It is allowed to spray water from the instrument in any direction with water spray. The spray pressure is 30kPa, the water output is 12.5L/Min, and the spray nozzle is 3m away from the meter.
- **IP67 :** Immersion type The instrument can be fully immersed in water (1m underwater) for a short time, 30min.
- **IP68 :** Submersible type It can negotiate with the manufacturer for the long-term work under water (5m underwater).

  Note : The protection level should be selected according to the above requirements and the actual conditions of the instrument. If the instrument is installed under the ground and is often flooded or the instrument is installed on the ground, the air humidity is high. The split type should be selected. The sensor IP68 should be placed in the protection. Inside the box or indoors.

Explosion Protection Instructions

- Explosion-proof mark : Ex d ib IIC T6 GB
- Product standard : Q/FT001-2019
- Assembly drawing no. : FTEMF-50-000

Explosion-proof grade : EX ia IIc T5

EX ———— Explosion-proof electrical signs

Ia ———— Intrinsically safe

IIc ———— Gas Group IIC Level

T5———— Temperature Group

Main Performance of the Converter

- Low-frequency square-wave exciting, Cexciting frequency : 1/16 power frequency, 1/20power frequency, 1/25 power frequency;
- High-frequency square-wave exciting, Cexciting frequency : 1/2 power frequency (for grouting liquid measure) This function is selectable);
- No need to add empty pipeline measurement, and can measure continuously, alarm by fixed value;
- Speed range : 0.1 --- 15m/s, Speed resolution: 0.5mm/s;
- AC high-frequency switching power, range of voltage: 85VAC --- 250VAC;
- DC 24V switching power, range of voltage : 20VDC --- 36VDC;
- Network function: MODBUS, HART, GPRS, PROFIBUS, Analog Loop Communication interface (This function is optional.);
- Chinese or English displaying mode, (other languages can be customized);
- Three integrator gross inside, respective register: Forward gross, reverse gross and minus value gross.

Especial Function

- Record the time when the power is turned off. This function can record the power interrupted time of instrument system automatically and recruit to count the missing flux;
- Record the hour gross. This function can record the flux gross in hours and fit for timed measure;
- The infrared handing keyboard can far-untouched operate all functions of converter.

Normal Operating Conditions

- Ambient Temperature Ranges : -10~+60°C;
- Relative Humidity : 5%~90%;
- Power Supply : 85 ~ 250V, 45~63Hz (single-phase AC).
- Dissipation Power : <20W (After connecting sensor).

Type of Connecting with Sensors

- The integrated circinal shells: circinal shells, shells connect with the flange directly, explosion-proof;
- The integrated squared shells: squared shells, shells connect with the flange directly;
- The split squared shells: squared shells (hang on the wall), Signal converters connect with cable of sensor;

Product Dimensions and Installation Dimensions

Converter Dimensions

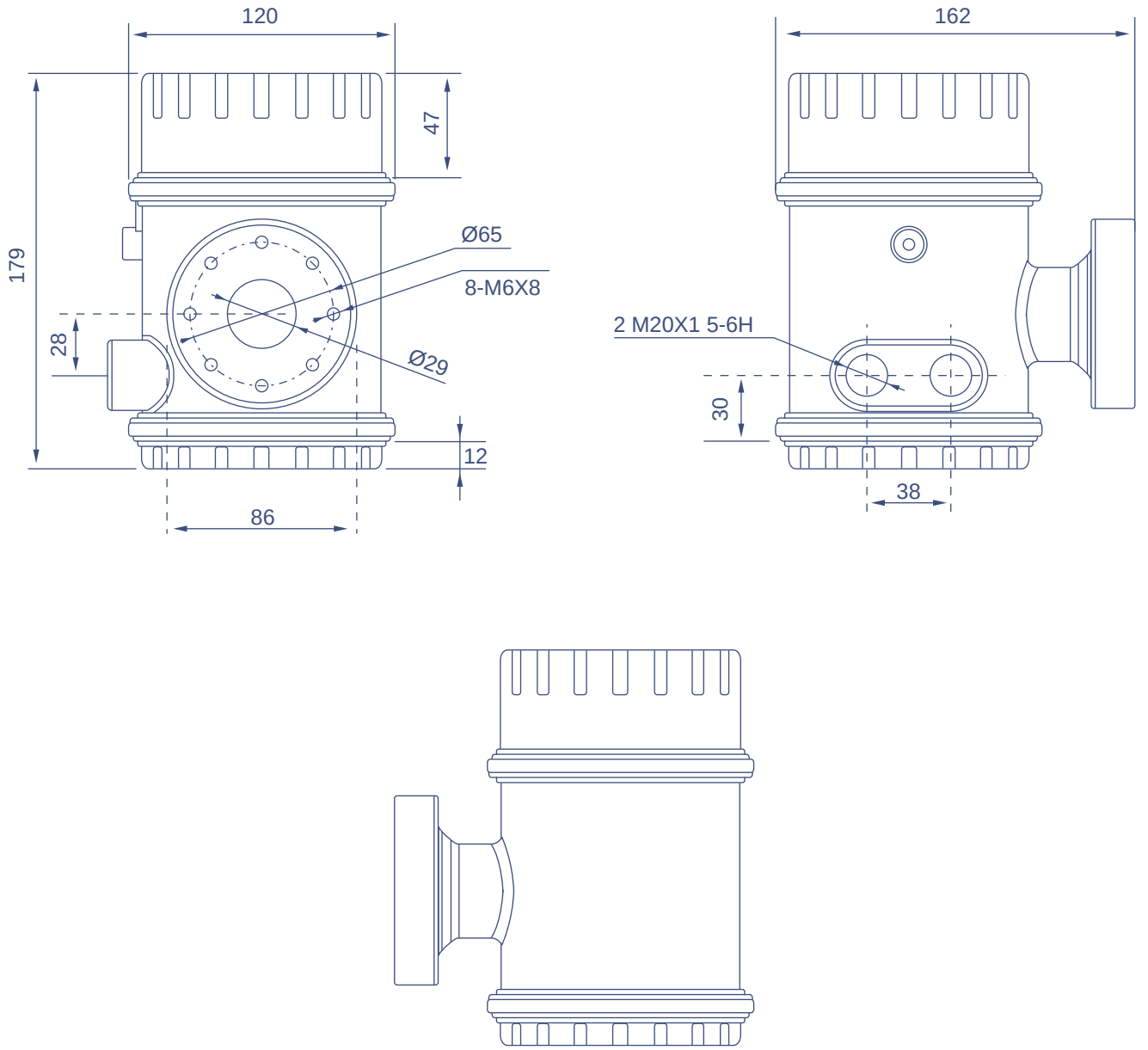

Sensor Shape and Installation Dimensions

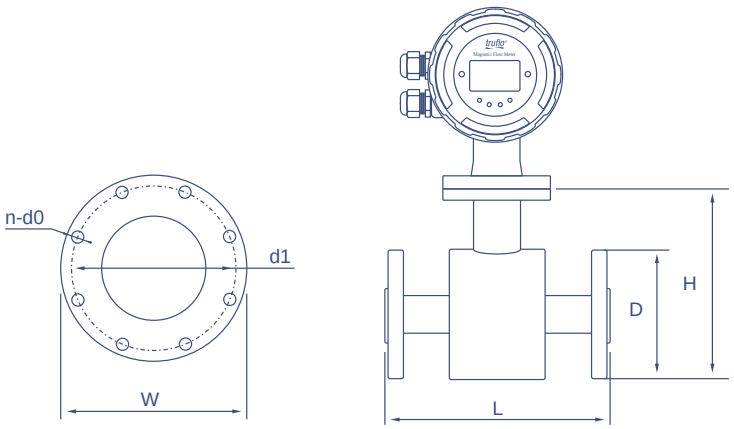

DN3~DN150, 1.6, 4.0MPa Sensor

DN	L	H	1.6MPa					4.0MPa				
			D	d_1	d_0	n	b	D	d_1	d_0	n	b
3	200	142	90	60	14	4	14	90	60	14	4	14
6	200	142	90	60	14	4	14	90	60	14	4	14
10	200	142	90	60	14	4	14	90	60	14	4	14
15	200	147	95	65	14	4	16	95	65	14	4	16
20	200	154	105	75	14	4	18	105	75	14	4	18
25	200	156	115	85	14	4	18	115	85	14	4	18
32	200	166	140	100	18	4	18	140	100	18	4	18
40	200	172	150	110	18	4	20	150	110	18	4	20
50	200	191	165	125	18	4	20	165	125	18	4	20
65	250	200	185	145	18	8	20	185	145	18	8	22
80	250	218	200	160	18	8	22	200	160	18	8	22
100	250	242	220	180	18	8	22	235	190	22	8	26
125	250	277	250	210	18	8	22	270	220	26	8	26
150	300	302	285	240	22	8	24	300	250	26	8	28

DN200~DN600, 1.0, 1.6MPa Sensor

DN	L	H	1.6MPa					1.0MPa				
			D	d_1	d_0	n	b	D	d_1	d_0	n	b
200	350	362	340	295	22	12	26	340	295	22	8	24
250	450	412	405	355	26	12	28	395	350	22	12	26
300	500	472	460	410	26	12	32	445	400	22	12	28
350	550	522	520	470	26	16	35	505	460	22	16	30
400	600	572	580	525	30	16	38	565	515	26	16	32
450	600	626	640	585	30	20	42	615	565	26	20	35
500	600	676	715	650	33	20	46	670	620	26	20	38
600	600	776	840	770	36	20	52	780	725	30	20	42

Display

The electromagnetic flow converter enters into the automatic measurement status after power on. All of measurement functions are ready and measurement data is displayed.

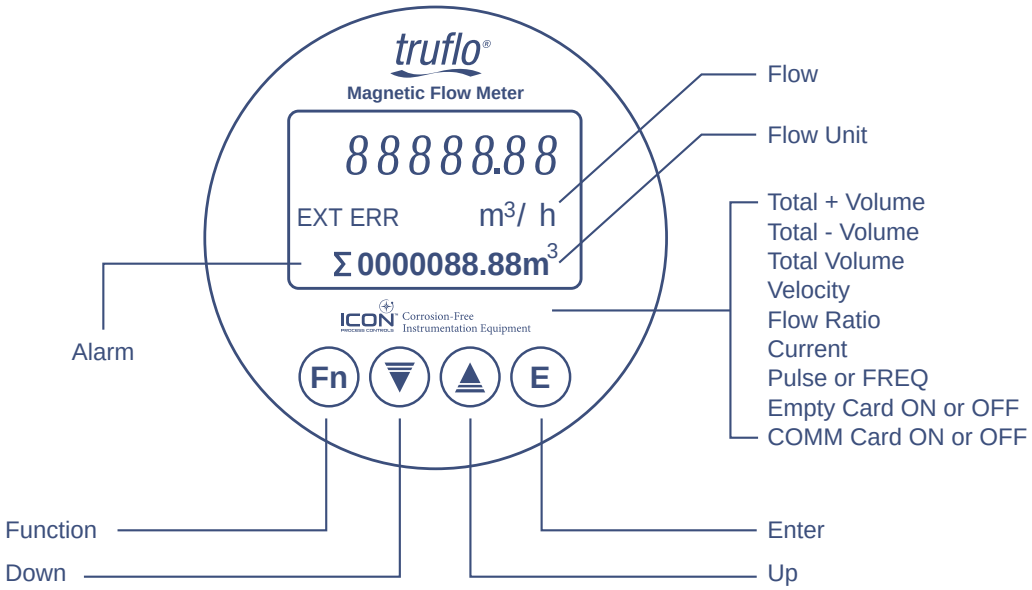

Keyboard

The transmitter enters the automatic flow measurement mode after power on. All of measurement functions are ready and measurement data are displayed. The parameters can be setup and displayed by pressing four keys: Up key, Down key, Function key, and Enter key.

▲ Up key	Plus 1 for the selected digit, or go back to the previous item
▼ Down key	Minus 1 for the selected digit, or enter the next item
Fn + ▲ Function key + Up key	Move cursor to right
Fn + ▼ Function key + Down key	Move cursor to left
Fn + E Function key + Enter key	Select the password menu, enter the password, then go to the lower submenu, and save parameters
E Enter key	Go back to upper submenu. Pressing and holding for more than two seconds, then releasing it at Level One menu can activate the flow meter automatically go to the measurement mode

Note: Actually pressing and holding the Enter Key for more than two seconds, then releasing it at any time, can activate the flowmeter automatically go to the measurement mode.

Password

The converter has three level passwords.

- The level one password : only can modify the password of level one;
- The level two passwords : can modify the password of level one and level two, also have authority to view password of the level one;
- The level three password : can modify the password of level one, level two and level three; also have authority to view password of the level one and level two;

The level one default password is "10000", and the level two default password is "09000".

Menu List

The menu list is using structured design. It has reasonable classification, and has very clear hierarchy, also convenient to operate. The menu list is shown below.

Converter Description Abbreviation

Abbreviation	Description	Abbreviation	Description
BLKT	Back Light	**EXT**	Excitation
NEGF	Negative Flow	**POSF**	Positive Flow
CAL	Calibration	**FREQ**	Frequency
COEF	Coefficient	**ALMH**	High Limit Alarm
COD	Code of Production	**INIT**	Initialization
DEC	Decimal	**ALML**	Low Limit Alarm
DIR	Direction	**MAINT**	Maintenance
DOD	Date of Production	**PF**	Power Frequency
EPD	Empty Pipe Detection	**THD**	Threshold

Converter LCD Menu List

First Level Menu	Second Level Menu	Third Level Menu
PARAMETER SETTING	DIAMETER	3mm~3000mm
	DAMPING TIME	0~50 Sec.
	FLOW UNIT	L/h, L/m, L/s, m3/h, m3/m, m3/s
	FLOW DEC SET	Auto Manu
	VOLUME UNIT	0.001m^3, 0.01m^3, 0.1m^3, 1m^3, 0.001L, 0.01L, 0.1L, 1L
	MEASURE RANGE	Setting
	EXT FREQ	1/2, 1/4, 1/8, 1/16, 1/20(PF)
	EXT CURRENT	20%, 50%, 80%, 100%
	LIQUID DENSITY	Setting
FUNCTION	MEASURE DIR	FORWARD / BACKWARD

First Level Menu	Second Level Menu	Third Level Menu	
SETTING	NEGF MEASURE	ON/OFF	
	NEGF OUTPUT	ON/OFF	
	LOW FLOW CUTOFF	ON/OFF	
	LOW FLOW VALUE	Setting	
	SMART FILTER	ON/OFF	
	PEAK LIMIT THD	Setting	
	METER ALARM	ON/OFF	
	EXT ALARM	ON/OFF	
	EPD ALARM	ON/OFF	
	EPD ALARM THD	Setting	
	ALMH ALARM	ON/OFF	
	ALMH ALARM THD	Setting	
	ALML ALARM	ON/OFF	
	ALML ALARM THD	Setting	
	BAT ALARM	ON/OFF	
	BAT VALUE	Value	
COMMUNICATION SETTING	MODBUS	BUS ADDRESS	
		BAUDRATE	300,600,1200,2400, 4800,9600,19200, 38400
OUTPUT SETTING	OUTPUT MODE	FREQ/PULSE	
	PULSE UNIT	0.001m3, 0.01m3, 0.1m3, 1m3, 0.001L, 0.01L, 0.1L, 1L	
	PULSE WIDTH	Setting	
	FREQ RANGE	1~10000Hz	
DIAGNOSTIC TEST	4-20mA TEST	Setting	
	FREQ TEST	Setting	
	PULSE TEST	Setting	
SYSTEM SETTING	LANGUAGE	CHN/ENG	
	LCD CONTRAST	Setting	
	LCD BKLT	Open/Close	
	LCD BKLT TIME	1\5\10\30\60 min	
	POSF SUM PRESET	Setting	
	NEGF SUM PRESET	Setting	
	FLOW SUM RESET	Total Cumulative Flow to be Cleared	
	SHOW PASSWORD	Including three level Password	
	PASSWORD SET	Including three level Password	

First Level Menu	Second Level Menu	Third Level Menu	
SYSTEM SETTING	SYSTEM DATE	Display Date (Adjustable)	
	SYSTEM TIME	Display Time (Adjustable)	
	SENSOR DATE	Display Sensor Production Date (Adjustable)	
	SENSOR CODE	Display Sensor Production Code (Adjustable)	
	METER DATE	Display Meter Production Date (Adjustable)	
	METER CODE	Display Meter Production Code (Adjustable)	
	LAST CAL DATE	Display the Last Calibration Date (Adjustable)	
	LAST MAINT DATE	Display the Last Maintenance Date (Adjustable)	
CALIBRATIOM SETTING	ZERO CORRECT	Setting	
	SENSOR COEF	Setting	
	FLOW CORRECT	FLOW CORRECT UNIT	m/s, m^3/h
		CORRECT POINT 1	Setting
		CORRECT COEF 1	Setting
		CORRECT POINT 2	Setting
		CORRECT COEF 2	Setting
		CORRECT POINT 3	Setting
		CORRECT COEF 3	Setting
		CORRECT POINT 4	Setting
		CORRECT COEF 4	Setting
		CORRECT POINT 5	Setting
		CORRECT COEF 5	Setting
	CORRECT SET	ON/OFF	
	NORMALIZED COEF	Setting	

Connection & Wiring Diagram

Wiring Diagram and Signal Definitions

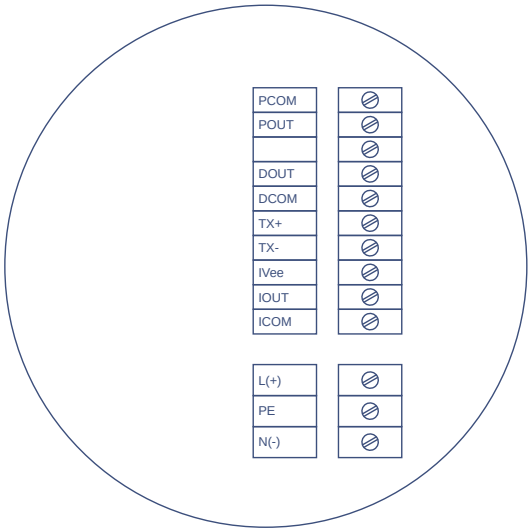

IVee	Current Ext Power	Analog Current Output
IOUT	Current Output	
ICOM	Current Ground	
POUT	Frequency / Pulse Output	Frequency / Pulse Output
PCOM	Frequency / Pulse Ground	
DIR	DIR/Alarm +	Direction / Alarm Output
DCOM	DIR/Alarm -	
TX +	Com+ (RS485+)	Communication
TX -	Com- (RS485-)	

Frequency/Pulse Output

The Frequency and Pulse are using the same output interfaces: POUT (P+) and PCOM (P-), and user can select the output mode via the menu. The Frequency/Pulse support 3 connection mode:

Connection Mode 1 : External Power Supply with OC Gate

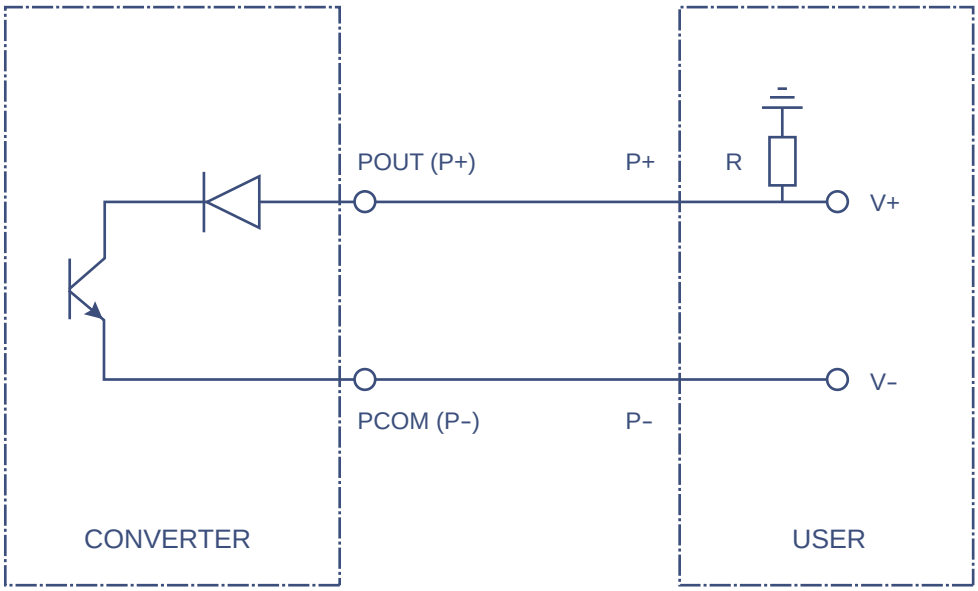

Connection Mode 2 : External Power Supply with OC Gate

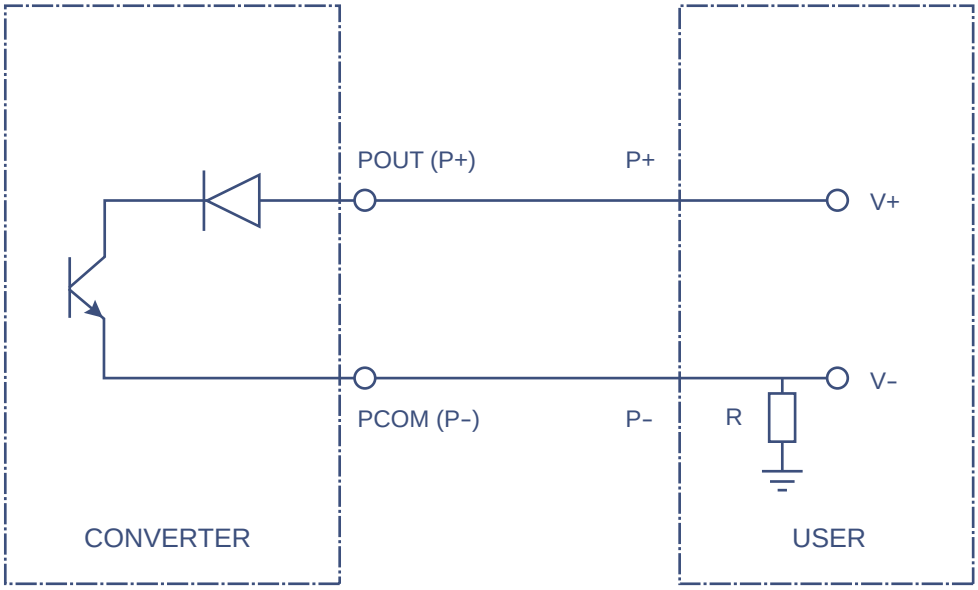

Connection Mode 3: FInternal Power Supply with OC Gate

In this mode, user should plug in the jumper of internal power supply inside the converter.

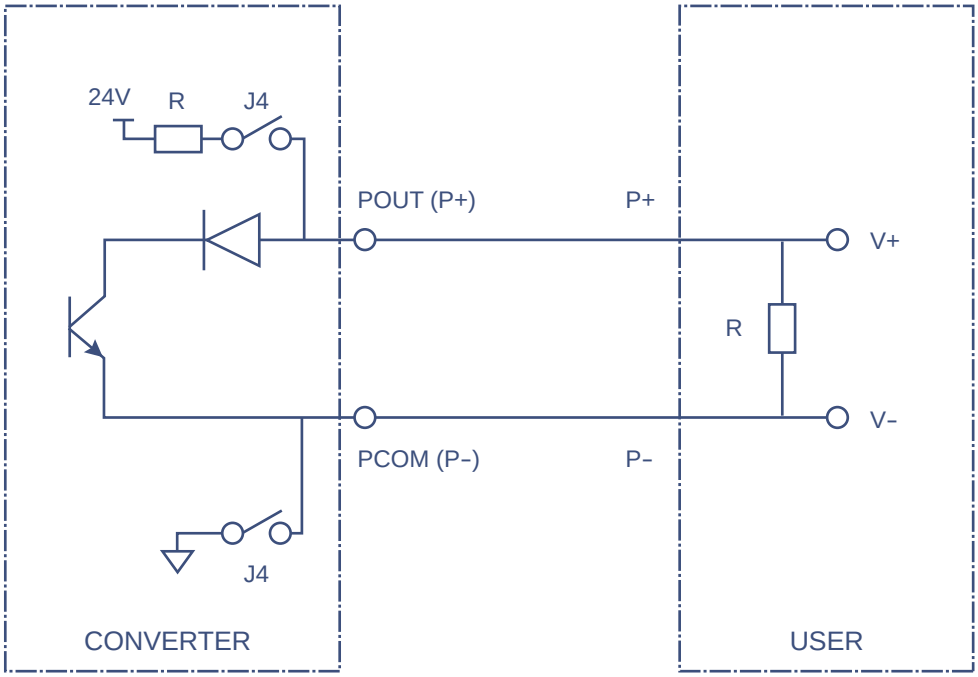

4~20mA Current Output

There are 3 interfaces of the current output: IOUT(I+), ICOM (I-) and IVee (External Power), which can support 2 connection modes: Internal Power Supply and External Power Supply.

Connection Mode 1 : Internal Power Supply Mode

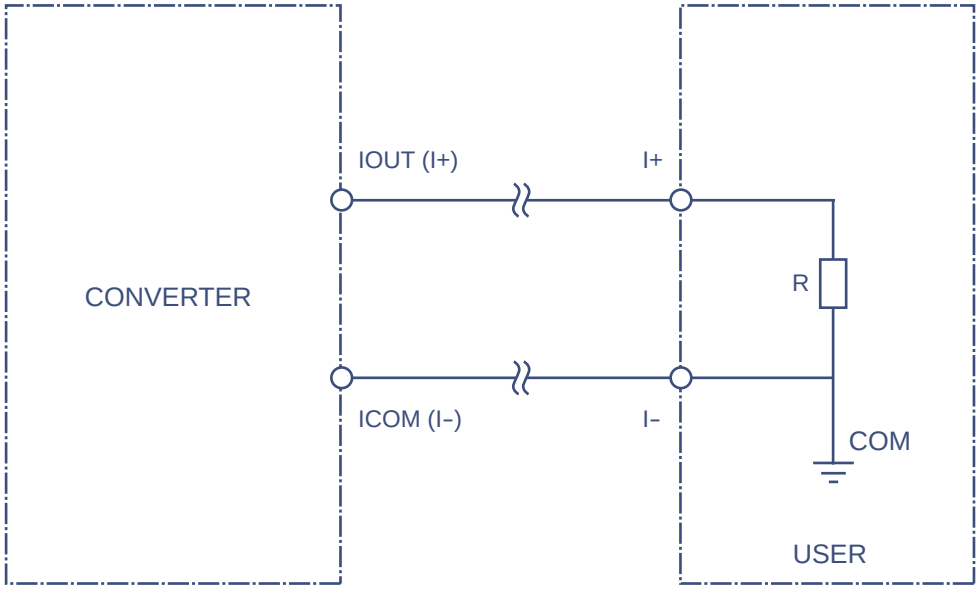

Connection Mode 2 : External Power Supply Mode

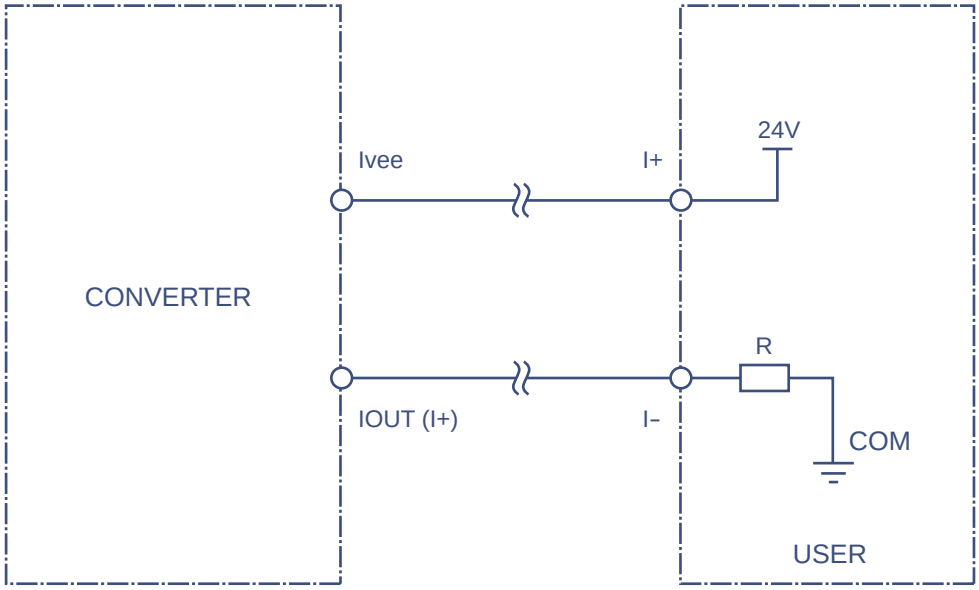

Appendix 1 Basic Parameters

PARAMETER SETTING

DIAMETER	The converter can be equipped with different sensors that have different diameter of measuring pipes from 3mm to 3000.
DAMPING TIME	It means time of filter measure value. The long one can enhance the stability of flow display and output digital, and fits for gross add up of pulse flow; the short one means fast respond rate, and fits for production control.
FLOW UNIT	The flow unit can choose from the parameters (L/s, L/m, L/h, m3/s, m3/m, m3/h),and the user can choose the proper unit according to the technological requirement and using habit.
VOLUME UNIT	Converter display is counter with 9 bits, and the max is 999999999. Integrator units are L, m3(liter, stere). It is accordant with flow unit and is set automatically. This is the same to flow unit. When the flow unit is L/h, L/m and L/s the integrator unit is liter, when the flow unit is m3/h,m3/m and m3/s the integrator unit is stere. Flow integrator value: 0.001L, 0.010L, 0.100L, 1.000L 0.001m3, 0.010m3, 0.100m3, 1.000m3 ;

MEASURE RANGE	Flow range means upper limit value, and lower limit value is set “0” automatically. So, it makes the range, and makes the relation of percent display, frequency output and current output with flow:
	percent display = (flow measure / measure range) * 100 %;
	frequency output = (flow measure / measure range) * frequency full;
	current output = (flow measure / measure range) * current full + base point;
	pulse output will not affect.

EXT FREQ	This function enables customer to select the frequency for the excitation coil. Normally 1/8 or 1/16 (of power frequency) is selected.
EXT CURRENT	This function enables customer to select the current for the excitation coil.

FUNCTION SETTING

MEASURE DIR	If users think the direct and design are differ, just change the direct parameter is OK, but not change exciting or signal.
LOW FLOW CUTOFF	This function is selectable: **ON/OFF** In **"ON"** mode, when flow ratio is less than the low flow cut-off value, it will be cut off and the LCD display indicates “0”; In **"OFF"** mode, no matter what the flow ratio is, no any flow value is cut off.
LOW FLOW VALUE	This function serves user to set the minimum flow that the flowmeter will react on. It is expressed in percentage, such as 0.5%, 2%, 5%, etc.
SMART FILTER	This function is selectable: **ON/OFF** In **"ON"** mode, the flowmeter automatically starts the built-in smart judgment algorithm, making the flow measurement with better stability. We recommend set it up under the guidance of the manufacturer.
METER ALARM	This function is selectable: **ON/OFF** In **"ON"** mode, the flowmeter works according to all alarm setting status; In **"OFF"** mode, the flowmeter turns off all alarm status.

EPD ALARM THD	In “ON” mode, the user should setup the threshold value so that the flowmeter can detect the empty pipe status. Keep liquid full of the pipe Keep liquid with no movement Based on the record of previous settings Setup a new threshold value

COMMUNICATION SETTING

MODBUS	
BUS ADDRESS	It means this instrument’s address when communicates with many, and has 01~99, holding the 0.
BAUDRATE	300, 600, 1200, 2400, 4800, 9600, 19200, 38400
OUTPUT SETTING	
OUTPUT MODE	Two kinds of Outputs are can be chosen: Frequency Output and Pulse Output. Frequency Output is continuous square waveform and Pulse output is a serial wave of square wave. Frequency output is mainly used for instant flow and total integrated flow in short time measurement. Frequency output can be chosen in equivalent frequency unit and volume of integrated flow can be displayed. Frequency Output can be used in long time measurement for total integrated flow with volume units. Frequency output and pulse output are usually from OC gates so that DC power supplies and load resistors have to be required.
PULSE UNIT	Pulse Unit is referred to one pulse for value of flow. Under the same flow, the smaller pulse, the higher frequency output, and the smaller error will be.
PULSE WIDTH	Set the Pulse width from 0.1ms to 100ms.
FREQ RANGE	Frequency output range is as the upper limit of flow measure, just the percent flow 100%. Frequency output upper limit can be selected between 1~10000Hz.
PULSE WIDTH	Set the Pulse width from 0.1ms to 100ms.
DIAGNOSTIC TEST	
4-20mA TEST | FREQ TEST | PULSE TEST | SPEED TEST	
CALIBRATION SETTING	
ZERO CORRECT	Make sure the sensor is full of flow, and the flow is stillness. Flow zero is shown as velocity of flow, mm/s. Converter’s zero-flow correction displays like this: ± 0 0 0 0 0 mm/s FS = ± 0 0 0 0 0 mm/s * Upper large words: correction value of zero; * Lower small words: FS means measure value of zero; * Note : Just make the Upper words equal to the lower words with different direction. Flow zero is the compound value of the sensor, and should be recorded in sensor list and band. The unit will be mm/s, and the sign will be opposite with correction value.
SENSOR COEF	“Sensor Coefficient” is printed on the Label of the sensor when it is made in factory. The “sensor coefficient” has to be set into Sensor Coefficient Parameter when it runs with converter.

Appendix 2 Flow Data-Logging

A. Start/Stop Data Logging

The transmitter can store the latest 50 history records for “Start/stop data-logging”. It’s convenient for users to view. The specific methods of operation are as follows:

In the measurement mode, go to the Enquiry menu first and then go to the "start/stop settings" sub-menu, you’ll browse the “Start/stop” records.

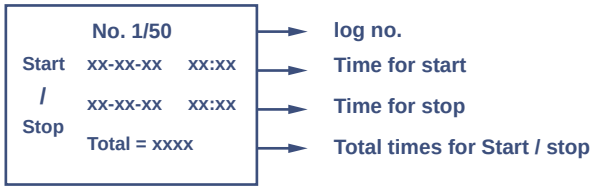

Note: The data logging number displays up to 50 records from No. 1 to No. 50. The user can browse through the arrow keys. The time format is "YY - MM - DD hr: mi". The total “start/stop” records are up to 9999.

B. Daily Data Logging for Volume

The transmitter can store the latest 60 history records for “Daily data logging for volume”. It’s convenient for users to view. The specific methods of operation are as follows:

In the measurement mode, go to the Enquiry menu first and then go to the "Daily data logging for volume" sub-menu, you’ll browse the “Daily data logging for volume” records.

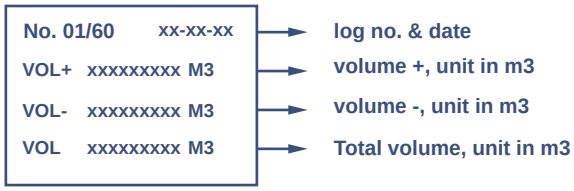

Note: The data logging number displays up to 60 records from No. 1 to No. 60. The user can browse through the arrow keys. The time format is "YY - MM - DD".

C. Monthly Data Logging for Volume

The transmitter can store the latest 36 history records for “Monthly data logging for volume”. It’s convenient for users to view. The specific methods of operation are as follows:

In the measurement mode, go to the Enquiry menu first and then go to the "Monthly data logging for volume" sub-menu, you’ll browse the “Monthly data logging for volume” records.

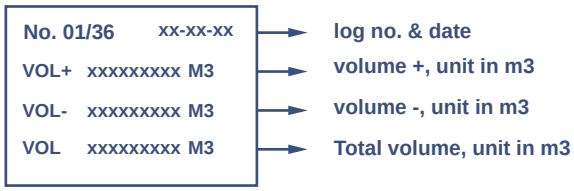

Note: The data logging number displays up to 36 records from No. 1 to No. 36. The user can browse through the arrow keys. The time format is "YY - MM - DD".

Appendix 3 Notes to Flow Correction

Flow rate correction is mainly suitable for different flow segments for non-linear correction. The measurement range is divided into five correction points and five correction factors.

Flow correction factor is setup based on the original meter coefficient. Therefore, turn off the correction function first, and then turn it on to enable the correction function. According to the nonlinear flow segment, user should set up the flow correction point and its factor. If the setting values are appropriate, the flowmeter won't need to be re-calibrated.

The original velocity comes from the meter coefficient calculation. The corrected velocity forms from the flow rate correction. The corrected velocity corresponds to the followings:

- **Correction point 1** < original velocity < correction point 2
  Corrected velocity = correction factor 1* original velocity

- **Correction point 2** < original velocity < correction point 3
  Corrected velocity = correction factor 1*correction point 1+ correction point 2*(original velocity - correction point 1)

- **Correction point 3** < original velocity < correction point 4
  Corrected velocity = correction factor 1*correction point 1+ correction point 2* (correction point 2 - correction point 1) + correction point 3*(original velocity - correction point 3)

- **Correction point 4** < original velocity < correction point 5
  Corrected velocity = correction factor 1*correction point 1+ correction point 2* (correction point 2 - correction point 1) + correction point 3*(correction point 3 - correction point 2) + correction point 4*(original velocity - correction point 4)

- **Correction point 5** < original velocity
  Corrected velocity = correction factor 1*correction point 1+ correction point 2* (correction point 2 - correction point 1) + correction point 3*(correction point 3 - correction point 2+ correction point 4* (correction point 4 - correction point 3) +correction point 5*(original velocity - correction point 5)

Note: When setup correction point, user should keep the following relationship:
Correction point 1< correction point 2< correction point 3< correction point 4 < correction point 5

The median value of the correction factor is 1.0000. If the correction factor is greater than the median value it is a positive factor; if the correction factor is less than the median value, it is a negative correction factor

ICON™ PROCESS CONTROLS
Corrosion-Free Instrumentation Equipment

Warranty, Returns and Limitations

Warranty

Icon Process Controls Ltd warrants to the original purchaser of its products that such products will be free from defects in material and workmanship under normal use and service in accordance with instructions furnished by Icon Process Controls Ltd for a period of one years from the date of sale of such products. **Icon Process Controls Ltd** obligation under this warranty is solely and exclusively limited to the repair or replacement, at **Icon Process Controls Ltd** option, of the products or components, which I**con Process Controls Ltd** examination determines to its satisfaction to be defective in material or workmanship within the warranty period. Icon Process Controls Ltd must be notified pursuant to the instructions below of any claim under this warranty within thirty (30) days of any claimed lack of conformity of the product. Any product repaired under this warranty will be warranted only for the remainder of the original warranty period. Any product provided as a replacement under this warranty will be warranted for the one year from the date of replacement.

Returns

Products cannot be returned to **Icon Process Controls Ltd** without prior authorization. To return a product that is thought to be defective, go to **www.iconprocon.com**, and submit a customer return (MRA) request form and follow the instructions therein. All warranty and non-warranty product returns to **Icon Process Controls Ltd** must be shipped prepaid and insured. **Icon Process Controls Ltd** will not be responsible for any products lost or damaged in shipment.

Limitations

This warranty does not apply to products which: 1) are beyond the warranty period or are products for which the original purchaser does not follow the warranty procedures outlined above; 2) have been subjected to electrical, mechanical or chemical damage due to improper, accidental or negligent use; 3) have been modified or altered; 4) anyone other than service personnel authorized by Icon Process Controls Ltd have attempted to repair; 5) have been involved in accidents or natural disasters; or 6) are damaged during return shipment to **Icon Process Controls Ltd** reserves the right to unilaterally waive this warranty and dispose of any product returned to **Icon Process Controls Ltd** where: 1) there is evidence of a potentially hazardous material present with the product; or 2) the product has remained unclaimed at Icon Process Controls Ltd for more than 30 days after Icon Process Controls Ltd has dutifully requested disposition. This warranty contains the sole express warranty made by **Icon Process Controls Ltd** in connection with its products. ALL I**MPLIED WARRANTIES, INCLUDING WITHOUT LIMITATION, THE WARRANTIES OF MERCHANTABILITY AND FITNESS FOR A PARTICULAR PURPOSE, ARE EXPRESSLY DISCLAIMED**. The remedies of repair or replacement as stated above are the exclusive remedies for the breach of this warranty. I**N NO EVENT SHALL Icon Process Controls Ltd BE LIABLE FOR ANY INCIDENTAL OR CONSEQUENTIAL DAMAGES OF ANY KIND INCLUDING PERSONAL OR REAL PROPERTY OR FOR INJURY TO ANY PERSON. THIS WARRANTY CONSTITUTES THE FINAL, COMPLETE AND EXCLUSIVE STATEMENT OF WARRANTY TERMS AND NO PERSON IS AUTHORIZED TO MAKE ANY OTHER WARRANTIES OR REPRESENTATIONS ON BEHALF OF Icon Process Controls Ltd**. This warranty will be interpreted pursuant to the laws of the province of Ontario, Canada.

If any portion of this warranty is held to be invalid or unenforceable for any reason, such finding will not invalidate any other provision of this warranty

For additional product documentation and technical support **visit www.iconprocon.com | e-mail: sales@iconprocon.com support@iconprocon.com | Ph: 905.469.9283**

ICON™ PROCESS CONTROLS Corrosion-Free Instrumentation Equipment

~~CORROSION~~

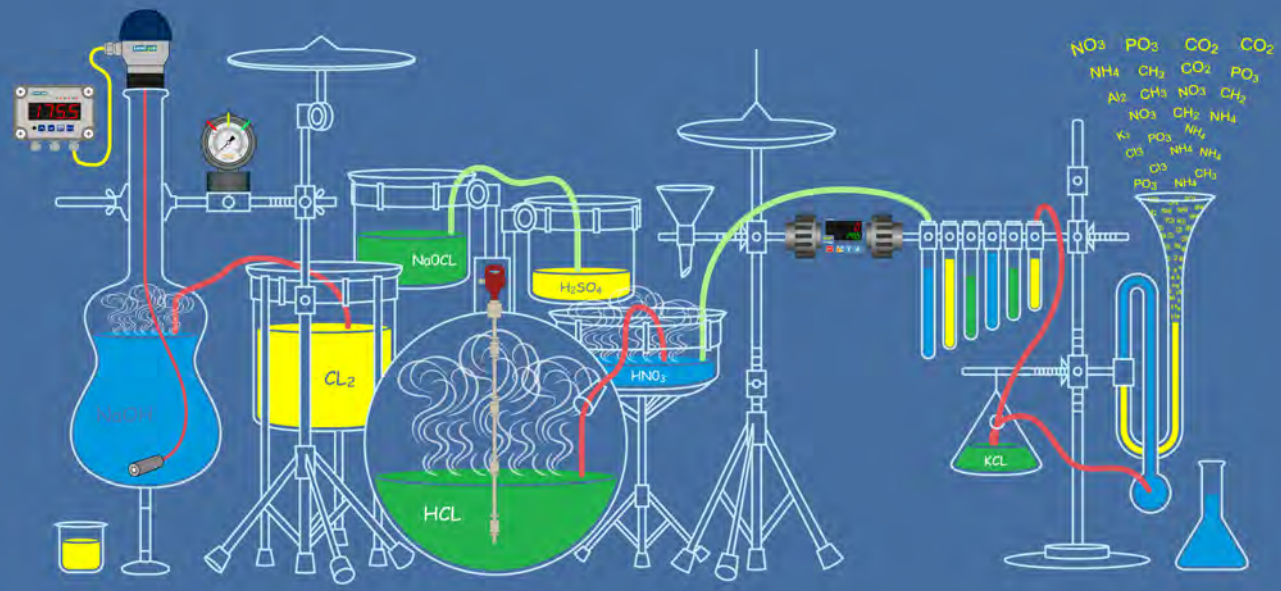

We Measure & Control All Kinds of Corrosive Liquid S#*%

'Industry's Most Extensive Line of Corrosion-Free Instrumentation' Equipment'

ICON™ PROCESS CONTROLS

Corrosion-Free Instrumentation Equipment