ProPulse 2® Series
Mini Turbine Flow Meter

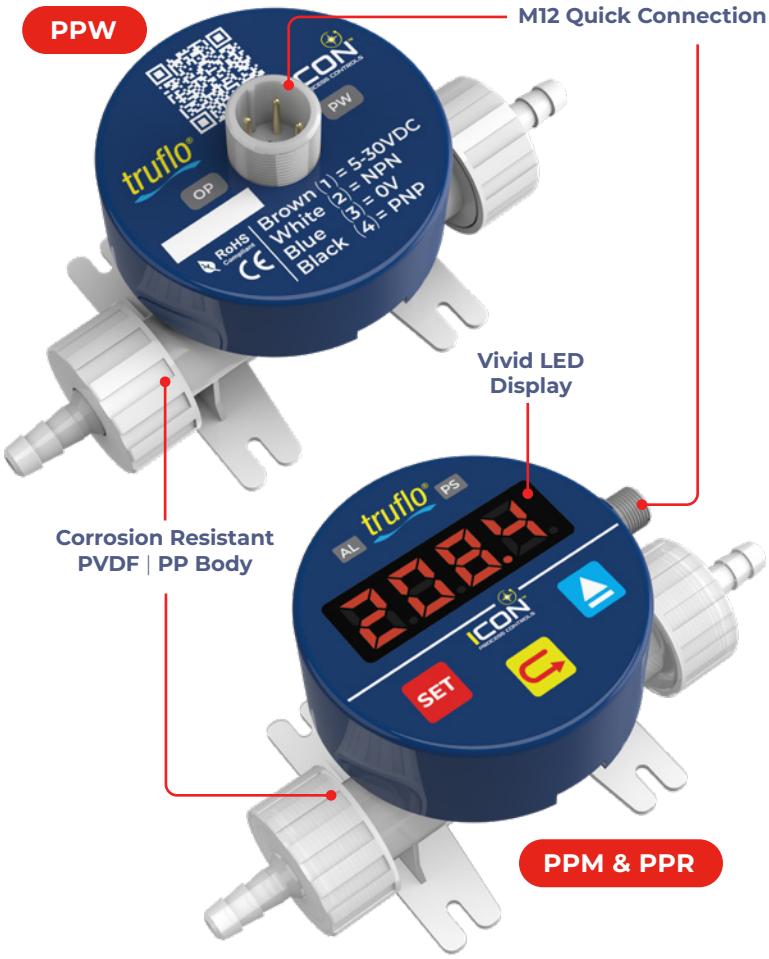

- Excellent Chemical Resistance
- No Programming Required
- Ultra Low Flow Ranges | 50 ml/min | 0.013 GPM
- Large Temperature Range (-40 - 248°F | -40 - 120°C)
- Excellent Choice for Tubing
- NPN or PNP Pulse Output | 4 – 20mA | RS485
- Compact Lightweight Design
- NPN Pulse Relay Output

Small but mighty

The ProPulse 2® provides superior performance and delivers accurate Ultra-Low Flow measurement that is highly repeatable under the most demanding of industrial environments.

The ProPulse 2® operates using a PVDF rotor with encapsulated magnetic inserts, which rotate on a long- wearing set of sapphire bearings designed to provide years of reliability. As the rotor spins, the magnetic field produced by the magnets is picked up via a Hall Effect Sensor, which converts the rotation into a square wave NPN pulse, 4 – 20mA, or RS485 output that can be sent directly to a metering pump or local display.



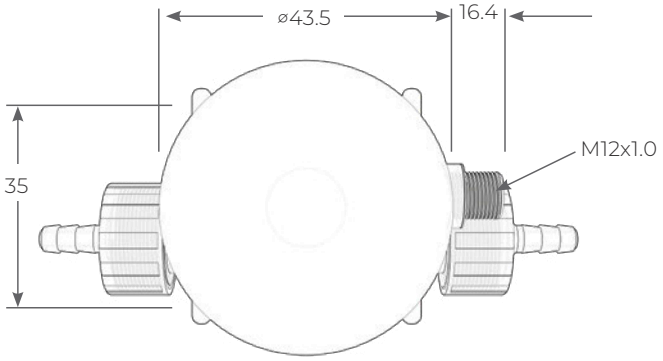

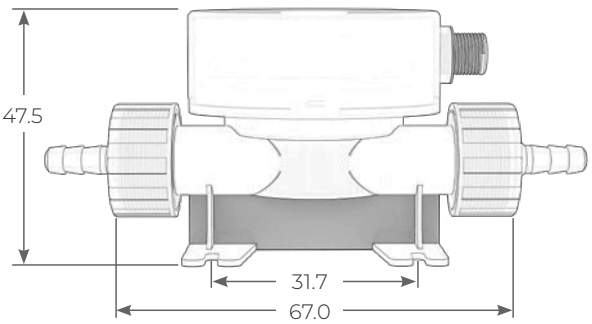

PVDF Turbine

- Great Chemical Resistance
- Anti-Stick and Low Frictional Properties
- Excellent Impact Strength
- Excellent Mechanical Properties

Example

- Prevent Pumps from Running Dry
- Notification for Filter | Strainer Change-Out
- Output to Alarm | Shut Off Pump

ProPulse 2® Series
Mini Turbine Flow Meter

truflo®

Specifications

Body Material	PP | PVDF
O-Ring	Viton
Operating Temperature	-4°F – 176°F | -20°C – 80°C
Max. Working Pressure | Non-Shock	71 psi | 5 bar
Accuracy	± 0.5% of F.S. @ 25°C
Output Current	PPW (Blind) 50mA max | PPM &PPR (Display) 150mA max
Max. Contact Current	1.5A
Power Supply	10 – 30 VDC
Protection Class	IP65 | NEMA 4X

Flow Range

Model	Flow Range (LPM)	Flow Range (GPM)	K Factor (LPM)	K Factor (GPM)
3⁄16" Tube	0.05 – 1.00	0.013 – 0.264	14,500	PPR & PPM: 14,500 | PPW: 54,882
¼" Tube (Low Flow)	0.06 – 2.00	0.016 – 0.528	9,000	PPR & PPM: 9,000 | PPW: 34,065
¼" Tube	0.30 – 5.00	0.079 – 1.321	2,200	PPR & PPM: 2,200 | PPW: 8,327
⅜" Tube	0.50 – 15.00	0.132 – 3.963	1,050	PPR & PPM: 1,050 | PPW: 3,974
⅛" FNPT	0.50 – 15.00	0.132 – 3.963	1,050	PPR & PPM: 1,050 | PPW: 3,974

Electrical Connections

M12 Connection (no Internal wiring required)

Color	PPR (RS485)	PPM (4-20mA)	PPW (Pulse)
Brown	+ 10-30 VDC	+ 10-30 VDC	+ 10-30 VDC
Black	RS-	NPN Alarm Output	PNP Output
Blue	0V	0V	0V
White	RS+	+V or +mA Output	NPN Output
		NPN Output Current: 150mA max.	Output Current: 50mA max.

Model Selection

PP - [R] - [05H] - [PP]

Version	Process Connection		Material
R : LED Display with RS485	**03N:** ⅛" FNPT	**06HL :** ¼" Hose (Low Flow)	**PP:** PP
M : LED Display with 4-20mA	**05H:** 3⁄16" Hose	**08H :** ⅜" Hose	**PF:** PVDF
W: Blind with Pulse Output	**05S :** 3⁄16" Straight Pipe	**08S :** ⅜" Straight Pipe	
	06H: ¼" Hose		

FPM PVDF RoHS Compliant CE