DIAPHRAGM PULSATION DAMPER

FPD 06, 1.06, 10, 1.10



FPD 06, 10 KP.51 Z



FPD 06, 1.06 Z



FPD 10, 1.10 Z

Concept

The KNF diaphragm pulsation damper can effectively reduce the pulsation after the pump by up to 97%, whereby it is important to note that the type of pulsation damper selected and the correct installation are essential in ensuring an optimal performance.

The pulsation damper is made up of only a few parts and is constructed in a simple but effective way. A diaphragm separates the liquid section (upper part) from the damping chambers (lower part). The damping elements (situated in the damping chambers) combined with the separating diaphragm remove a large part of the pulsation caused by the pump. In the upper part of the pulsation damper there are also two choke orifices which aid the damping process.

Features

Hight chemical resistance

The use of chemically resistant materials such as PP, PVDF, PTFE, FFPM or other material combinations for the parts which come in contact with the liquid allows almost all neutral or corrosive liquids to be pumped.

Durable and maintenance free

The carefully considered design of this very compact pulsation damper ensures safe operation and a long life even under the most severe conditions.

Areas of use

The KNF diaphragm pulsation damper is very versatile thus allowing it to be used not only in conjunction with a KNF pump, but in many general situations where less pulsation is required.

The pulsation damper can be used in the following areas:

- To reduce the vibration in hoses and pipes.
- To help remove pulsation which is preventing the system from functioning correctly.
- The protection of instrumentation connected after the pump.

FPD 06, 1.06 Z

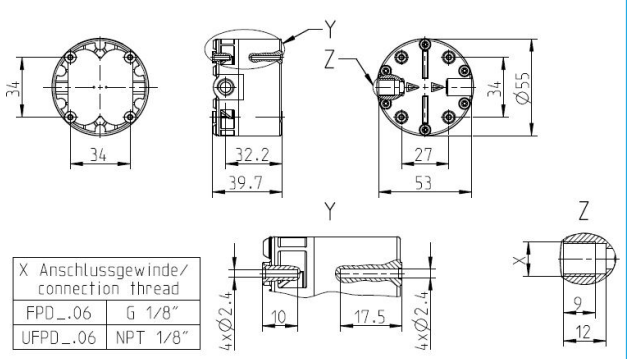

X Anschlussgewinde/ connection thread	
FPD_.06	G 1/8"
UFPD_.06	NPT 1/8"

FPD 10, 1.10 Z

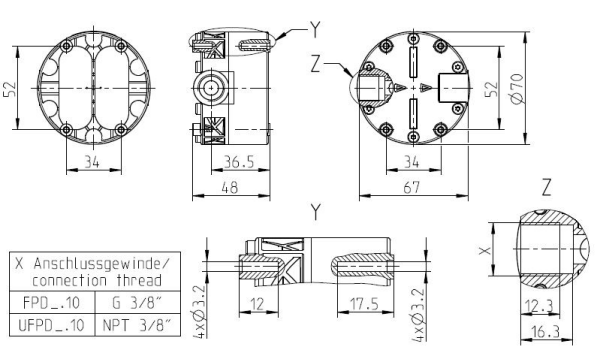

X Anschlussgewinde/ connection thread	
FPD_.10	G 3/8"
UFPD_.10	NPT 3/8"

THE KNF MODULAR CONCEPT OF SELECTION

Our versatile self-selection program allows you to personally determine the optimum characteristics that you require from your pulsation damper. Select your diaphragm pulsation damper from the following characteristics:

KNF pump type being used	Max. allowed pressure (mWg)	Pulsation damper type			
		Basic model	1	2	accessory
NF 5, NFB 5, NFB 25, NF 10, NF 25, NF 30, NF 60, NF 100	20	FPD 06			Z
NF 1.5, NF 1.10, NF 1.30, NF 1.60, NF 1.25	60*	FPD 1.06			Z
NFB 100, NF 300, NF 600	20	FPD 10			Z
NF 1.100, NF 1.300, NF 1.600	60*	FPD 1.10			Z
	Example	FPD 06	KP	.51	Z

* For the KT- and TT version: max. allowed system pressure = 40 mWg

DAMPENING EFFECT

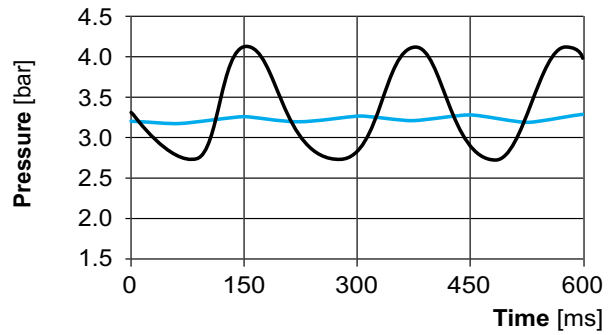

- Pressure peaks after the pump without FPD
- Pressure peaks after the pump with FPD

1 MATERIALS		
KP/ KP.51*	Housing Diaphragm	PP EPDM
KT	Housing Diaphragm	PP FFPM
TT	Housing Diaphragm	PVDF FFPM

* food grade conformity according to the standard NSF/ANSI 169, for further information see options.

2 OPTIONS	
.51	NSF certified / FDA conform

Selection and operation

- Hydraulic connections:
  - NPT thread
  - G thread
- The KNF diaphragm pulsation damper has been constructed so that the remaining pulsation will be lower than 200 mbar. This value can be improved upon if the system parameters (system pressure, motor speed, etc.) are known.
- There is the possibility that the pulsation damper will increase the pressure after the pump. This should be taken into consideration when choosing the pump.
- The pulsation damper should be located as close as possible to the pump outlet. Long connection hoses between the pump and the pulsation damper can create vibrations.

Options

NSF National Sanitary Foundation

NSF is market leader in the development and controlling of standards relevant for equipment used for handling food. By using different toxicological tests our products will be certified according to the standard NSF/ANSI 169. This certification will confirm that all of the products with the code .51 are certified for the use with foods/ consumables. In addition to this it also means that the pumps are constructed with wetted parts which come with a FDA declaration of conformity. A yearly audit from NSF will be carried out to ensure that these standards are being maintained. A list of the various products are available on request.

* FDA = Food and Drug Administration

ID Nr. 069185_02, 01.2017
We reserve the right to make technical changes

© KNF Flodos AG, Wassermatte 2, 6210 Sursee, Switzerland

YOUR LOCAL PARTNER AROUND THE WORLD

KNF SALES ORGANIZATION

Australia KNF Regional Office
Moreland West VIC 3055
Tel. +61 3 9386 4959
info@knf.com.au
www.knf.com.au

Benelux Netherlands KNF Verder B.V.
3451 GG Vleuten
Tel. +31 30 677 92 40
info@knf-verder.nl
www.knf-verder.nl

Benelux Belgium and Luxemburg
KNF Verder N.V.
2630 Aartselaar
Tel. +32 3 871 96 24
info@knf.be
www.knf.be

China KNF Technology (Shanghai) Co., Ltd.
Shanghai 201203
Tel. +86 21 5109 9695
info@knf.com.cn
www.knf.com.cn

France KNF Neuberger SAS
68128 Village-Neuf
Tel. +33 389 70 35 00
info@knf.fr
www.knf.fr

Germany KNF Neuberger GmbH
79112 Freiburg
Tel. +49 7664 5909 0
info@knf.de
www.knf.de

India KNF Pumps + Systems (India) Pvt. Ltd.
Hinjewadi Pune 411 057
Tel. +91 20 640 13 923
info@knfpumps.in
www.knfpumps.in

Italy KNF Italia S.r.l.
20063 Cernusco s. Naviglio (MI)
Tel. +39 02 929 04 91
info@knf.it
www.knf.it

Japan KNF Japan Co. Ltd.
Tokyo 104-0033
Tel. +81 3 3551 7931
info@knf.co.jp
www.knf.co.jp

Korea KNF Neuberger Ltd.
135-502 Seoul
Tel. +82 2 959 0255
knf@knfkorea.com
www.knfkorea.com

Latin America KNF Regional Office
Tel. +1 609 649 1010
gb@knf.com
www.knf.com/es

Morocco, Tunisia, Algeria
KNF Neuberger SAS
68128 Village-Neuf
Tel. +33 389 70 35 00
info@knf.fr
www.knf.fr

Singapore KNF Regional Office
Tel. +65 9722 1994
info@knf.com.sg
www.knf.com.sg

Sweden, Finland, Denmark, Norway
KNF Neuberger AB
117 43 Stockholm
Tel. +46 8 744 51 13
info@knf.se
www.knf.se

Switzerland KNF Neuberger AG
8362 Balterswil
Tel. +41 71 973 99 30
knf@knf.ch
www.knf.ch

UK, Ireland KNF Neuberger U.K., Ltd.
Witney, Oxfordshire OX28 4FA
Tel. +44 1993 77 83 73
info@knf.co.uk
www.knf.co.uk

USA, Canada KNF Neuberger, Inc.
Trenton, NJ 08691-1810
Tel. +1 609 890 8600
knfusa@knf.com
www.knfusa.com

KNF PRODUCT CENTERS

Gas Pumps KNF Neuberger GmbH
DE-79112 Freiburg
info@knf.de
www.knf.de

Micro Gas Pumps KNF Micro AG
CH-6260 Reiden
info@knf-micro.ch
www.knf-micro.ch

Liquid Pumps KNF Flodos AG
CH-6210 Sursee
info@knf-flodos.ch
www.knf-flodos.ch