Blue-White®

A1

FLEXFLO® Peristaltic Metering Pump



Video link:

Features

> Tube Failure Detection (TFD+) senses tube rupture
> Heavy duty display shield protects pump controls
> SCADA Inputs include: 4-20mA (on “V” model), Remote Start/Stop
> SCADA Outputs include: 4-20mA (on “V” model), single 250V/3A Relay (TFD+/FVS), and a single solid state (Motor On)
> FDA compliant tubing

NEMA 4X

Highlights

Flow range
0.003 – 5.60 GPH
0.011 – 21.2 LPH

Pressures
100 PSI
(6.89 bar)

Turndown ratio
2,000 : 1

Exclusive
Tube Failure Detection (TFD+) System

Motor
Brushless DC

Warranty
2 Years

Control Methods

Control Methods	Manual Control	4-20mA Input	Remote Start/Stop	4-20mA Ouput	Alarm Output	FVS	Motor Status Output
A1F	•		•		•	•	•
A1V	•	•	•	•	•	•	•

For more help and information regarding **A1**, please visit www.blue-white.com or scan this QR code.

Engineering Specifications

Maximum Working Pressure	100 psig (6.89 bar)
Maximum Fluid Temperature	185 °F (85 °C)
Maximum Ambient Temperature	14 °F to 115 °F/ -10 °C to 46 °C
Maximum Viscosity	5,000 Centipoise
Maximum Suction Lift	30 ft. Water at sea level (14.7 atm psi)
Operating Voltage	115V60Hz 1 PH (0.6A max.)
	220V50Hz 1 PH (0.3A max.)
	230V60Hz 1 PH (0.3A max.)
	230V50Hz 1 PH (0.3A max.)
	240V50Hz 1 PH (0.3A max.)
Power Cord Options	115V60Hz = NEMA 5/15 (USA)
	230V60Hz = NEMA 6/15 (USA)
	220V50Hz = CEE 7/VII (EU)
	240V50Hz = AS 3112 (Australia/New Zealand)
	230V50Hz = BS 1363/A (UK)
Signal Connectors	M12 - 5 pin (IP67 rated connectors on “V” models)
Motor	Brushless DC, 50W
Duty Cycle	Continuous
Motor Speed Adjustment Resolution	2,000 : 1 (0.05 - 100%) Max rpm = 65 rpm
Maximum Overall Dimensions	7.25” W x 9” H x 10” D (18.5 W x 22.9 H x 25.2 D cm)
Product Weight	6 lb. (2.7 Kg)
Approximate Shipping Weight	13 lb. (5.9 Kg)
Approximate Shipping Dimensions	10.5” W x 13.75” H x 11” D (26.7 W x 35 H x 28 D cm)
Enclosure	NEMA 4X (IP66), Valox® (PBT) & PA12
RoHS Compliant	Yes
Standards	cETLus, CE

Materials of Construction

Non-wetted Components:	
Enclosure:	Valox® (PBT) & PA12
Pump Head:	Valox® (PBT)
Pump Head Cover:	Acrylic
	Permanently lubricated sealed motor shaft support bronze sleeve bearing.
Cover Screws:	Stainless steel, polypropylene cap
Roller Assembly:	Rotor: Valox® (PBT)
	Rollers: Nylon
	Roller Bearings: Bronze
Motor Shaft:	Chrome plated steel
TFD System Sensor:	Polysulfone (PES)
Power Cord:	3 Conductor, SJTW-A water-resistant
Tube Installation Tool:	GF Nylon
Mounting Brackets and Hardware:	316 Stainless steel screws, GF Nylon bracket

Wetted Components:	
Pump Head Assembly:	Tubing**: Flex-A-Prene®, Flex-A-Thane®, Flex-A-Chem®
	Adapter Fittings: PVDF
Injection / Back-Flow Check Valve:	Body & Insert: PVDF
	Check Ball: Ceramic
	Spring: Hastelloy C-276
	Ball Seat O-Ring: TFE/P
	Static Seal O-Ring: FKM
Ancillary Items Provided:	Suction Tubing: 3/8” OD x 1/4” ID x 10’ Clear PVC
	Discharge Tubing: 3/8” OD x 1/4” ID x 10’ Polyethylene (LLDPE)
	Suction Strainer: Polypropylene
	Weight: Ceramic

** Flex-A-Prene®, Flex-A-Thane®, and Flex-A-Chem® tubing comply with FDA 21 CFR, 117.2600 criteria for food processing.

NOTE: Additional Accessories, Tanks, and M12 Cables sold separately.

Output Specifications

Tube Model	Feed Rate			Max Speed	Max Pressure	Max Temperature
	GPH	LPH	mL/Min	RPM	PSI(bar)	°F(°C)
A1-1*	0.001 - 1.09	0.002 - 4.13	.035 - 69	65	65 (4.50)	130 (54)
A1-3*	0.003 - 5.60	0.011 - 21.2	.176 - 353	65	50 (3.45)	130 (54)
A1-4*	0.001 - 0.44	0.001 - 1.68	.014 - 28	65	100 (6.89)	130 (54)
A1-6*	0.001 - 1.35	0.003 - 5.14	.043 - 85	65	100 (6.89)	185 (85)
A1-7*	0.004 - 4.17	0.0158 - 15.8	.132 - 263	65	50 (3.45)	185 (85)
A1-8*	0.003 - 3.09	0.0117 - 11.7	.098 - 195	65	50 (3.45)	130 (54)

Dimensions

Dim	Inch	cm	Dim	Inch	cm
A	9.46”	24.02	**D**	7.18”	18.23
B	9.92”	25.19	**E**	1.5”	3.81
C	7.18”	18.23			

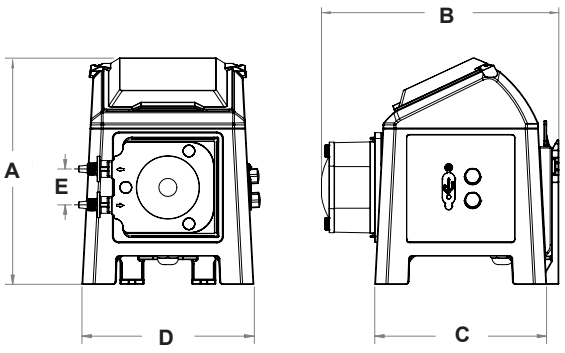

Model Number Matrix

FLEXFLO® Model Number

A1	FLEXFLO® Peristaltic Metering Pump

Series

F	Standard Control Methods (Manual, Remote On/Off)
V	4-20mA Input, 4-20mA Ouput, In Addition to Standard Control Methods (Manual, Remote)

Power Cord (Operating voltage requirement 96VAC to 264VAC)

4	115V 50/60Hz, NEMA 5/15 plug (US)	**6**	220V 50/60Hz, CEE 7/V11 plug (EU)	**X**	No Power Cord

Pump Tube Size and Material

1	1/4” OD Flex-A-Thane® | 0.001 – 1.09 GPH | .035 - 69 mL/Min | 65 PSI (4.5 bar)
3	7/16” OD Flex-A-Thane® | 0.003 – 5.60 GPH | .176 - 353 mL/Min | 50 PSI (3.45 bar)
4	1/4” OD Flex-A-Prene® | 0.001 - 0.44 GPH | .014 - 28 mL/Min | 100 PSI (6.89 bar)
6	3/8” OD Flex-A-Prene® | 0.001 – 1.35 GPH | .043 - 85 mL/Min | 100 PSI (6.89 bar)
7	7/16” OD Flex-A-Prene® | 0.002 – 4.17 GPH | .132 - 263 mL/Min | 50 PSI (3.45 bar)
8	7/16” OD Flex-A-Chem® | 0.002 – 3.09 GPH | .098 - 195 mL/Min | 50 PSI (3.45 bar)

Inlet/Outlet Connection Size, Connection Type

T	3/8" OD x 1/4" Tube Compression Fitting
M	1/2" Male NPT Fitting
MB	1/2” Male BSPT Fitting, Natural PVDF (Kynar)

A1	**F**	**4**	**-**	**1**	**T**	**Sample Model Number**

Accessories



KIT-S07
KIT-S15
KIT-S30

*** Includes cover and foot valve**

KIT-S07 (7 Gallon), KIT-S15 (15 Gallon), KIT-S30 (30 Gallon)
STAR III TANKS, PP

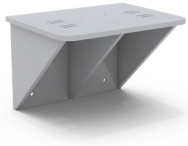

KIT-PSM
WALL MOUNT BRACKET, HDPE



KIT-MB
FLOOR MOUNTING BRACKETS

90010-663 115V/60Hz NEMA 5/15
90010-664 220V/50Hz CEE 7/V11
90010-665 230V/50Hz BS 1363/A
90010-666 240V/50Hz AS 3112
90010-696 230V/60Hz NEMA 6/15

POWER CABLES - 6 ft



CABLE-UAC
USB A-C CABLE - 3 ft



KIT-M12
TWO M12 CABLES - 9.8 ft



A1-(see spare parts page)
Spare Tube Element



TI40-6V
T.I. INJECTOR, 3/8” OD



C-340A
FOOT VALVE

Visit Accessory Pages for More Options

5300 Business Drive, Huntington Beach, CA 92649
TEL 714-893-8529 | FAX 714-894-9492 | www.blue-white.com | sales@blue-white.com
ISO 9001:2015 CERTIFIED
SINCE Quality 1957
MADE IN THE USA