Maintenance

- When the pump is idle, we recommend you to release the tubing from pressure. This helps to protect the tubing from unnecessary strain and prolongs its service life.
- Keep rollers clean and dry. This will prolong the service lives of tubing and pump head.
- Mirror-polished surfaces of pump head are easily to be scratched. Use water to rinse pump head or use soft cotton fabric to wipe its surface to avoid the scratching when pump head need to be cleaned.
- Kz35 is acid and alkali resistant to some extent. Avoid contacting acid and alkali for a long time.

LONGER

Baoding Longer Precision Pump Co., Ltd.

Add: 3rd/4th Floor, Building 6B, University Science Park
Baoding National, High - Tech Industrial Development Zone
Baoding, Hebei, China 071051
Tel: 86 - 312 - 3110087 3138553
Fax: 86 - 312 - 3168553
E - mail: longer@longerpump.com
Http://www.longerpump.com

KZ35 Pump Head User Guide

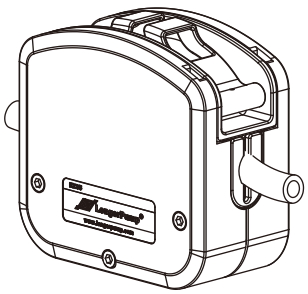

Baoding Longer Precision Pump Co., Ltd

KZ35 Peristaltic Pump Heads

Introduction

KZ35 pump head is specially designed and produced for pharmaceutical and food industry according to GMP criteria. The key parts are adopted 304 stainless steel and tubing clamps adopt PVDF material. The surface of KZ35 is polished to make it easier to be cleaned. The compression block and base of KZ35 are separated. Sophisticated structure ensure its stable performance and easy to change tubing. This pump head has features of high flow rate and corrosion resistance. Two KZ35 can be stackable.

Outline Dimension

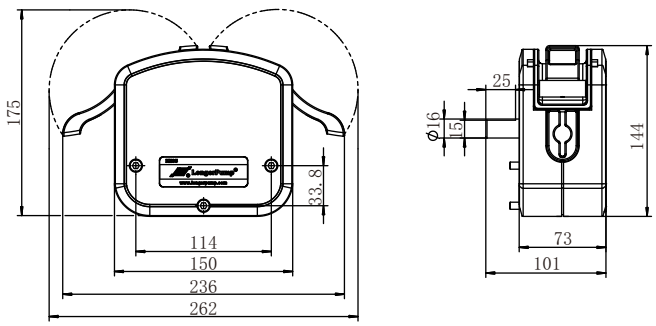

Structure

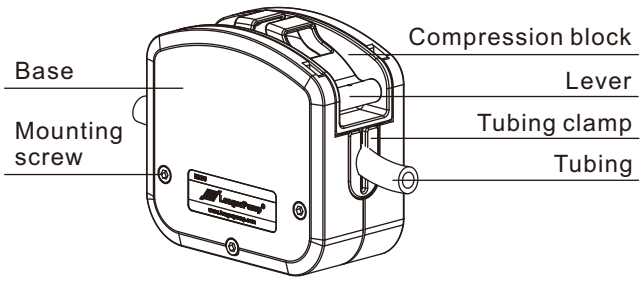

Features

- Main parts adopt 304 stainless steel; it is suitable for the application of food industry, pharmaceutical industry, etc.
- Base and compression block are individual parts which make it easy to load the tubing.
- There are two loading mode for tubing which are tubing clamp and tubing connector to meet different requirement of customers.
- Suitable tubing is 73# and 82#. Wide range flow rate.
- Two KZ35 can be stackable.

⚠ Warning:

- Tubing breakage may result in fluid sprayed from pump head. Use appropriate measures to protect operator and equipment. Please check the tubing frequently and change the tubing in time.
- Please shut down the power supply when changing tubing or open pump head.

Warranty:

The warranty period of KZ35 is one year. If repair or adjustment is necessary within the warranty period, the problem will be corrected at no charge if it is not due to misuse or abuse on your part, as determined by the manufacturer. Repair costs outside the warranty period, or those resulting form product misuse or abuse, maybe invoiced to you.

Specifications

Type	Tubing	Flow Rate（mL/min） 60~600（rpm）
KZ35	73#	600~7500
	82#	2000~11000

KZ35 Categories

Type		Part Number
Single pump head	Long shaft (see❼)	05024320001
Multi-pump head	Long shaft/Main head (see❽)	05024320002
	Short shaft/Stackable head (see❽)	05024320003

Tubing mounting mode

❖ Tubing clamp

Advantage: Fluid contacts the tubing only. No dead corner. No residue of fluid. Easy to clean.

Tubing clamper material:

PVDF

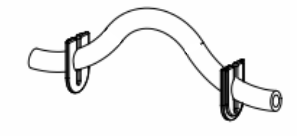

The suitable tubing length is 18cm between two tubing clamps.

❖ Tubing connector

Advantage: It needs only to change the tubing between tubing connectors after the tubing is worn.

Tubing connector material:

PVDF



The suitable tubing length is 16.5cm between two tubing connectors.

❖ Tubing clamp/connector loading procedure

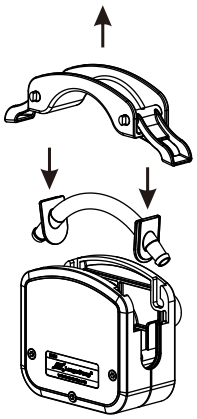

A, Turn left and right levers to open pump head, take out compression block.

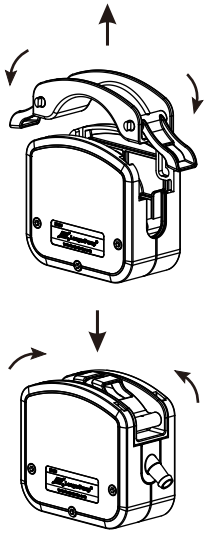

B, Insert tubing clamps or connectors loaded with tubing into the slots of base on both sides.

C, Put back the compression block and turn left/right lever to lock it.

Pump head installation

❖ Single pump head

1. Insert main shaft of pump head into the hole of coupling. Locate the coupling as shown in Figure #1, and then tighten the fastening screw on the coupling.
2. Connect pump head to drive, and then tighten the mounting screw. See Figure #2.

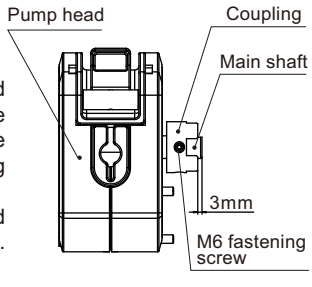

Figure #1

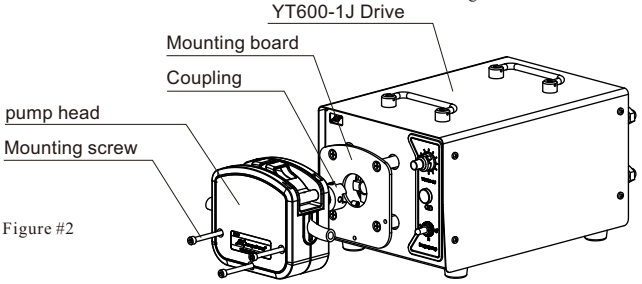

Figure #2

❖ Multi-pump head

1. Insert long shaft of pump head into the hole of coupling. Locate the coupling as shown in Figure #1, and then tighten the fastening screw on the coupling.
2. Insert short shaft of pump head into the keyway of long shaft end of pump head. Shown as Figure #1.
3. Use long mounting screws to tighten two pump heads in series on the drive. Shown as Figure #2.

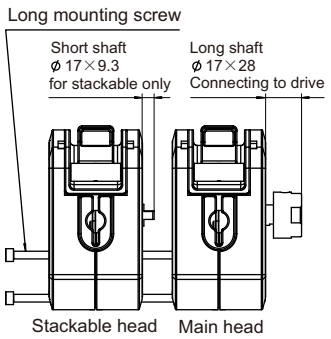

Figure #1

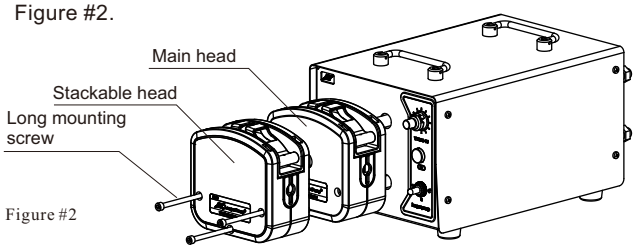

Figure #2